TPMC681 64 Digital Inputs/Outputs (Bit I/O)

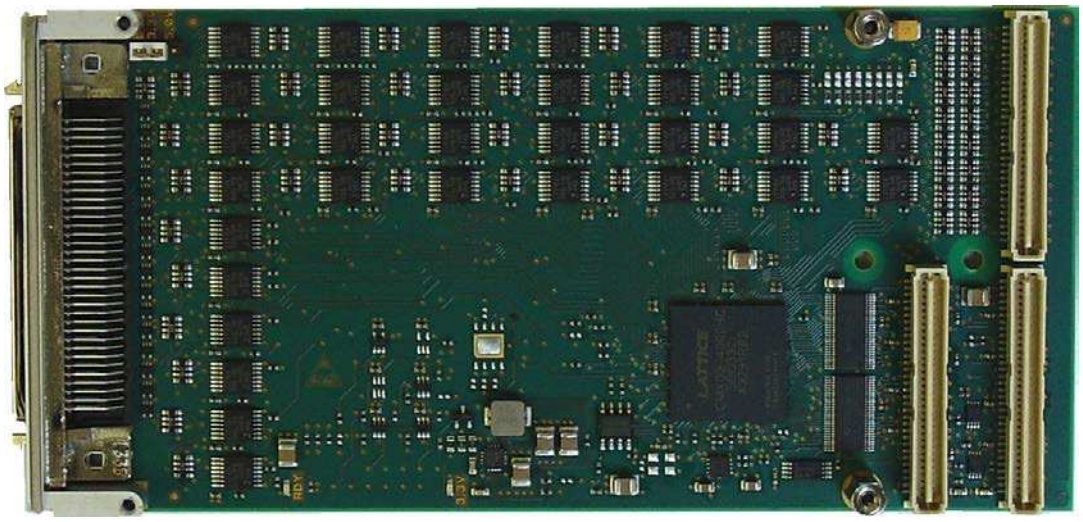

Application Information

The TPMC681 is a standard single-width 32 bit PMC module offering 64 ESD-protected TTL I/Os. Each line is individually programmable as input, output or tri-state. The receivers are always enabled, which allows determining the state of each I/O line at any time. This can be used as read back function for lines configured as outputs. Each TTL I/O line has a pull-up resistor. The pull-up voltage is selectable to be either +3.3V or +5V.

Each input can generate an interrupt. Signal edge handling is programmable to interrupt on rising and/or falling edge of an input signal. Interrupts can be enabled and disabled for each bit. For interrupt source detection the status of each bit can be read from interrupt status registers.

The TPMC681 provides front panel I/O via a HD68 SCSI-3 type connector and rear panel I/O via P14.

Software Support (TDRV006-SW-xx) for different operating systems is available.

Technical Information

- Standard single-width 32 bit PMC module conforming to IEEE P1386.1
- PCI 3.0 compatible interface
- 3.3V and 5V PCI Signaling Voltage
- Board size: 149 mm x 74 mm
- 64 interrupt generating digital I/O lines
  - 64 TTL I/Os
  - Direction individually programmable per line
  - TTL signaling voltage (maximum current: +/-24mA)
- ESD and overvoltage protection for each I/O line
- I/O access:
  64 I/O lines on HD68 front connector,
  parallel to up to 64 I/O lines on rear connector P14
  (upper 8 lines changeable to system ground)
- Temperature range: -40°C to +85°C

TEWS TECHNOLOGIES GmbH keeps the right to change technical specification without further notice.
All trademarks mentioned are property of their respective owners.

Issue 2.0.0
2014-02-13

TEWS TECHNOLOGIES GmbH

Am Bahnhof 7 25469 Halstenbek, Germany
Phone: +49 (0) 4101 4058 0 Fax: +49 (0) 4101 4058 19
e-mail: info@tews.com www.tews.com

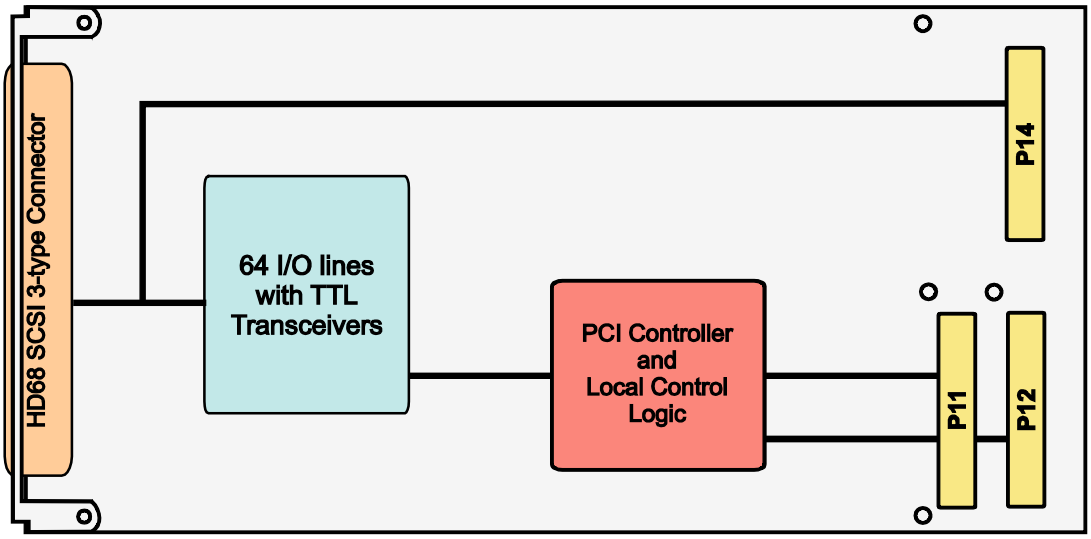

Order Information

RoHS Compliant

TPMC681-10R 64-bit TTL I/O, Bit I/O, interrupts, HD68 and P14 I/O

For the availability of non-RoHS compliant (leaded solder) products please contact TEWS.

Documentation

TPMC680-DOC User Manual

Software

TDRV006-SW-25 Integrity Software Support
TDRV006-SW-42 VxWorks Software Support (Legacy and VxBus-Enabled Software Support)
TDRV006-SW-65 Windows Software Support
TDRV006-SW-72 LynxOS Software Support
TDRV006-SW-82 Linux Software Support
TDRV006-SW-95 QNX Software Support

For other operating systems please contact TEWS.

Related Products

TA304 Cable Kit for Modules with HD68 Connector
TPIM003 PIM I/O Module, HD68 connector, special pin assignment

TEWS TECHNOLOGIES GmbH keeps the right to change technical specification without further notice.
All trademarks mentioned are property of their respective owners.

TEWS TECHNOLOGIES GmbH
Am Bahnhof 7 25469 Halstenbek, Germany
Phone: +49 (0) 4101 4058 0 Fax: +49 (0) 4101 4058 19
e-mail: info@tews.com www.tews.com