Artisan Technology Group

Artisan Technology Group is your source for quality new and certified-used/pre-owned equipment

- FAST SHIPPING AND DELIVERY
- TENS OF THOUSANDS OF IN-STOCK ITEMS
- EQUIPMENT DEMOS
- HUNDREDS OF MANUFACTURERS SUPPORTED
- LEASING/MONTHLY RENTALS
- ITAR CERTIFIED SECURE ASSET SOLUTIONS

SERVICE CENTER REPAIRS
Experienced engineers and technicians on staff at our full-service, in-house repair center

InstraView℠ REMOTE INSPECTION
Remotely inspect equipment before purchasing with our interactive website at ***www.instraview.com*** ↗

WE BUY USED EQUIPMENT
Sell your excess, underutilized, and idle used equipment
We also offer credit for buy-backs and trade-ins
www.artisantg.com/WeBuyEquipment ↗

LOOKING FOR MORE INFORMATION?
Visit us on the web at ***www.artisantg.com*** ↗ for more information on price quotations, drivers, technical specifications, manuals, and documentation

Contact us: (888) 88-SOURCE | sales@artisantg.com | www.artisantg.com

VMIVME-3128
Scanning 14-bit Analog-to-Digital Converter Board with Programmable Gain

Product Manual

A GE Fanuc Company

12090 South Memorial Parkway
Huntsville, Alabama 35803-3308, USA
(256) 880-0444 ◆ (800) 322-3616 ◆ Fax: (256) 882-0859

500-003128-000 Rev.B

Artisan Technology Group - Quality Instrumentation ... Guaranteed | (888) 88-SOURCE | www.artisantg.com

A GE Fanuc Company

12090 South Memorial Parkway
Huntsville, Alabama 35803-3308, USA
(256) 880-0444 ◆ (800) 322-3616 ◆ Fax: (256) 882-0859

Artisan Technology Group - Quality Instrumentation ... Guaranteed | (888) 88-SOURCE | www.artisantg.com

COPYRIGHT AND TRADEMARKS

© Copyright 2002. The information in this document has been carefully checked and is believed to be entirely reliable. While all reasonable efforts to ensure accuracy have been taken in the preparation of this manual, VMIC assumes no responsibility resulting from omissions or errors in this manual, or from the use of information contained herein.

VMIC reserves the right to make any changes, without notice, to this or any of VMIC's products to improve reliability, performance, function, or design.

VMIC does not assume any liability arising out of the application or use of any product or circuit described herein; nor does VMIC convey any license under its patent rights or the rights of others.

For warranty and repair policies, refer to VMIC's Standard Conditions of Sale.

AMXbus, BITMODULE, COSMODULE, DMAbus, IOMax**,** IOWorks Foundation, IOWorks Manager, IOWorks Server, MAGICWARE, MEGAMODULE, PLC ACCELERATOR (ACCELERATION), Quick Link, RTnet, Soft Logic Link, SRTbus, TESTCAL, "The Next Generation PLC", The PLC Connection, TURBOMODULE, UCLIO, UIOD, UPLC, Visual Soft Logic Control(ler), ***VMEaccess*****,** VMEbus Access***, VMEmanager*****,** ***VMEmonitor*****,** VMEnet, VMEnet II, and ***VMEprobe*** are trademarks and The I/O Experts, The I/O Systems Experts, The Soft Logic Experts, and The Total Solutions Provider are service marks of VMIC.

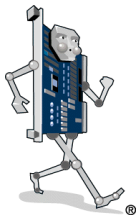

(I/O man figure)

(IOWorks man figure)

The I/O man figure, IOWorks, IOWorks man figure, UIOC, Visual IOWorks and the VMIC logo are registered trademarks of VMIC.

ActiveX, Microsoft, Microsoft Access, MS-DOS, Visual Basic, Visual C++, Win32, Windows, Windows NT, and XENIX are registered trademarks of Microsoft Corporation.

MMX is trademarked, Celeron, Intel and Pentium are registered trademarks of Intel Corporation.

PICMG and CompactPCI are registered trademarks of PCI Industrial Computer Manufacturers' Group.

Other registered trademarks are the property of their respective owners.

VMIC

All Rights Reserved

This document shall not be duplicated, nor its contents used for any purpose, unless granted express written permission from VMIC.

A GE Fanuc Company

12090 South Memorial Parkway
Huntsville, Alabama 35803-3308, USA
(256) 880-0444 ◆ (800) 322-3616 ◆ Fax: (256) 882-0859

Artisan Technology Group - Quality Instrumentation ... Guaranteed | (888) 88-SOURCE | www.artisantg.com

Table of Contents

List of Figures 9

List of Tables 11

Overview 13
List of Features: 14
Functional Description 15
Reference Material List 17
Safety Summary 18
Warnings, Cautions and Notes 19

Chapter 1 - Theory of Operation 21
Internal Functional Organization 22
Control Interface 23
Board Selection 23
Read/Write Operations 23
Bus Interrupter 23
Interval Timer and Channel Counter 23
Data Buffer Memory 25
Organization and Control 25
Data Storage and Retrieval 25
Operating Modes 26
Analog Input Multiplexing, Sampling and Digitizing 27
Input Configuration 27
Gain Control 29
Sampling and Digitizing 29
Analog-to-Digital Conversion 29
Power Converter 31

Artisan Technology Group - Quality Instrumentation ... Guaranteed | (888) 88-SOURCE | www.artisantg.com

Chapter 2 - Configuration and Installation 33
Unpacking Procedures 34
Physical Installation 35
Before Applying Power: Checklist 35
Operational Configuration 36
Factory-Installed Jumpers 36
Example of Jumper J10 through J12 Configuration 39
Access Modes 40
Board Location in Short I/O or Memory Space 40
Analog Input Gain 40
Converter Voltage Range 40
Input Voltage Range 41
External Triggering 41
Input Configurations 41
Internal Ground Connections 41
Calibration 42
Equipment Required 44
Calibration Procedure 44
Functional Verification 45
Connector Descriptions 47
Connector Functions 47
Input Modes 50
Input Cables 51
External Synchronization 51
System Considerations 52
Applications with Signal Conditioning Boards 52
Operation with Direct Analog Inputs 52

Chapter 3 - Programming 55
Controlling the VMIVME-3128 55
General Control Features 56
Addressing Modes and Board Location 56
Data Transfers 56
Reset Operations and Initialization 56
Conventions 56
Control Registers 57
Board Identification Register (BID) 57
Control and Status Register (CSR) 58

Artisan Technology Group - Quality Instrumentation ... Guaranteed | (888) 88-SOURCE | www.artisantg.com

Buffer Control Register (BCR) 60
Interrupter Registers 60
Timer/Counter Registers 60
Converter Data Register (CDR) 60
Data Organization and Control 61
Data Word 61
Scaling and Coding 61
Data Block 61
Data Buffer/RAM 63
Gain Selection 63
Gain Initialization Preload 63
Operating Modes 64
Continuous Scanning 64
Single Channel Random Access 65
Timed Burst 65
Locally Triggered Burst 65
Remotely Triggered Burst 65
Synchronizing Multiple VMIVME-3128 Boards 65
Gain Loading 65
Scan Monitoring 66
Data Ready Flag and Interrupt 66
Data Counter and Interrupt 66
Bus Interrupter 67
Interrupt Control Register 67
Interrupt Vector Register 67
Timer/Counter Control 68
General Characteristics 68
Scan Interval Timer 69
Data Counter Control 71
Typical Programming Examples 72
Example C Header File 72
Example C Program 73

Maintenance 77
Maintenance 77
Maintenance Prints 78

Artisan Technology Group - Quality Instrumentation ... Guaranteed | (888) 88-SOURCE | www.artisantg.com

Artisan Technology Group - Quality Instrumentation ... Guaranteed | (888) 88-SOURCE | www.artisantg.com

List of Figures

Figure 1 VMIVME-3128 Functional Block Diagram 16
Figure 1-1 VMEbus Interface Logic 24
Figure 1-2 Analog Multiplexer and PGA 28
Figure 1-3 Pipelined A/D Conversion 30
Figure 2-1 VMIVME-3128 Location of User-Configurable Jumpers 37
Figure 2-2 Locations of Test Points and Adjustments 43
Figure 2-3 P3 and P4 Connector Pin Configuration 49
Figure 2-4 P1 and P2 Connector Pin Configuration 50
Figure 3-1 Interrupt Registers Organization 67
Figure 3-2 VMIVME-3128 Timer Functional Block Diagram 69

Artisan Technology Group - Quality Instrumentation ... Guaranteed | (888) 88-SOURCE | www.artisantg.com

Artisan Technology Group - Quality Instrumentation ... Guaranteed | (888) 88-SOURCE | www.artisantg.com

List of Tables

Table 2-1 Programmable Jumper Functions 38
Table 2-2 Typical Jumper Configurations 39
Table 2-3 Input Configuration Selection 42
Table 2-4 Input/Output Connector Pin Assignments 47
Table 2-5 P4 and P3 Connector Pinouts 48
Table 3-1 VMIVME-3128 Board Register Map 57
Table 3-2 Control and Status Register (CSR) Bit Map 58
Table 3-3 Buffer Control Register 61
Table 3-4 ADC Data Format and Coding 62
Table 3-5 ADC Data Format 62
Table 3-6 Operating Mode Selection 64
Table 3-7 Interrupt Control Register Functions 68
Table 3-8 Timer/Counter Data Transfer Sequences 70

Artisan Technology Group - Quality Instrumentation ... Guaranteed | (888) 88-SOURCE | www.artisantg.com

Artisan Technology Group - Quality Instrumentation ... Guaranteed | (888) 88-SOURCE | www.artisantg.com

Overview

Contents

Functional Description 15
Reference Material List 17
Safety Summary 18
Warnings, Cautions and Notes 19

Introduction

The VMIVME-3128 board is a member of VMIC's extensive family of analog input/output products for the VMEbus. With 14-bit digitizing resolution, program-controlled gain, and automatic scanning of 64 differential or single-ended analog inputs, the VMIVME-3128 board provides exceptional dynamic range and analog input channel density. Various operating modes are supported, including continuous scanning, data bursts, external synchronization, and single channel operation. This board is designed to interface directly with VMIC's line of signal conditioning boards for digitizing the outputs from thermocouples, RTDs, and strain gages.

Individual channel gains are downloaded for selection in real-time during scanning operations, or the board can be configured with a fixed gain that is common to all channels. Multiple boards can be synchronized together to enable as many as 16 boards to initiate each scan simultaneously. An interval timer, bus interrupter, channel counter, and midscan/endscan flag simplify the monitoring of data within the dual-port data buffer.The broad range of system applications that can benefit from the VMIVME-3128 capabilities include factory automation, process control, data acquisition systems, training simulators, and laboratory instrumentation. The following brief overview of principal features illustrates the flexibility and performance that is available with the VMIVME-3128 board:

Artisan Technology Group - Quality Instrumentation ... Guaranteed | (888) 88-SOURCE | www.artisantg.com

List of Features:

- 64 differential or single-ended analog inputs
- 14-bit A / D conversion
- 58 kHz scanning rate
- Program-selectable gains of x1, x10, or x100
- A / D Converter ranges of ±2.5 V, ±5 V, ±10 V, 0 to +5 V, and 0 to +10 V
- Real-time automatic selection of individual channel gains
- 16- to 1,024-word dual-port data buffer
- Operation in short I / O (A16) or standard (A24) data space
- Program-controlled channel block size and buffer size
- Optional low pass input filters
- Continuous, burst, and single channel operating modes
- Free running operation or external / internal triggering
- Bus interrupter for midscan or endscan indication
- Program-controlled interval timer for timed data bursts
- Direct cabling from VMIC signal conditioning boards
- Initializes after a reset in autoscan mode with gain = x1

Artisan Technology Group - Quality Instrumentation ... Guaranteed | (888) 88-SOURCE | www.artisantg.com

Functional Description

The VMIVME-3128 (Figure 1 on page 16) is a high-resolution, 14-bit, 64-channel analog scanning and digitizing input board for VMEbus system applications. Dual-ported data memory, on-board timers, automatically controlled gain, and a program-controlled bus interrupter enable the VMIVME-3128 board to support extensive analog input traffic with minimum involvement of the host processor.

Analog inputs are scanned and digitized sequentially in blocks of 16 to 64 channels, and the digital values are stored in a dual-port data buffer which can be accessed at any time from the VMEbus. The gain of each channel can be program-controlled individually in real-time from an on-board gain buffer, or can be jumper-configured for a fixed gain that is common to all channels. Channel gain is software or jumper-selectable as x1, x10, or x100. A / D Converter voltage ranges are jumper-selectable from ±2.5 V, ±5 V, ±10 V, 0 to 5 V, and 0 to 10 V.

When a system or program reset occurs, the board initializes in the 64-channel continuous scanning mode, and if automatic gain control has been selected, all channel gains are initialized to unity (x1). After a reset operation, the program can select the timed burst, triggered burst or random access single channel modes, and can modify the block size, buffer size, and channel gains as necessary. The channel block is adjustable as 16, 32, 48, or 64 channels, and the data buffer size can be selected from 16 to 1,024 data words in six equal ratios of 2:1.

Timed data bursts are controlled by an interval timer which can provide repetitive or single-shot burst intervals of up to 536 s. A burst can consist of from 16- to 1,024-channel samples. A data ready flag is available at the middle or end of a scan, and an interrupt request can be generated simultaneously with the flag. The interrupt can also be initiated after a specific number of samples have been acquired.

Artisan Technology Group - Quality Instrumentation ... Guaranteed | (888) 88-SOURCE | www.artisantg.com

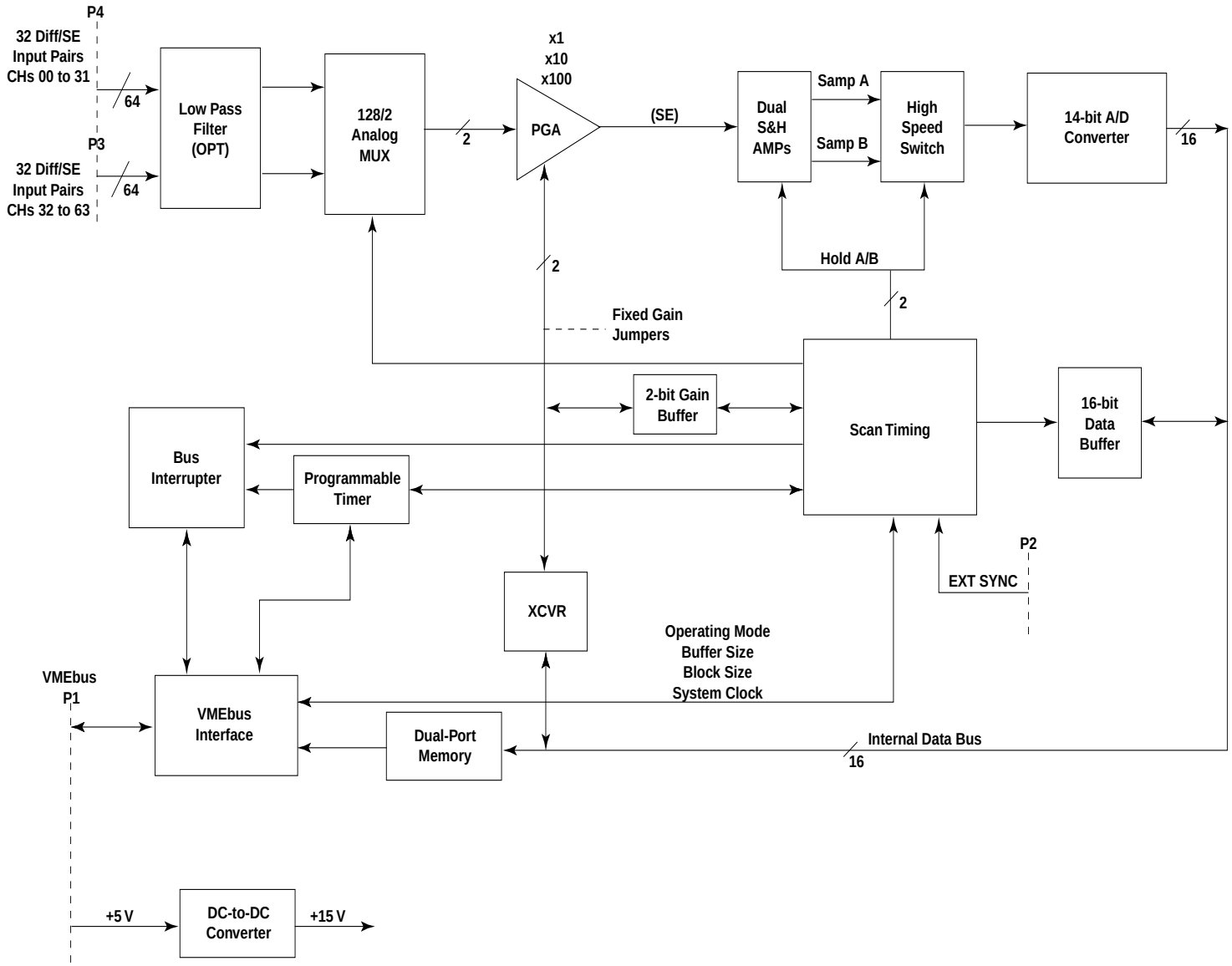

Figure 1 VMIVME-3128 Functional Block Diagram

Artisan Technology Group - Quality Instrumentation ... Guaranteed | (888) 88-SOURCE | www.artisantg.com

Reference Material List

For a detailed explanation of the VMEbus and its characteristics, refer to "The VMEbus Specification" available from:

VITA

VMEbus International Trade Association

7825 East Gelding Drive, No. 104

Scottsdale, Arizona 85260

(602) 951-8866

FAX: (602) 951-0720

www.vita.com

Physical Description and Specifications: Refer to Product Specification, 800-003128-000 available from:

VMIC

12090 South Memorial Pkwy.

Huntsville, AL 35803-3308, USA

(256) 880-0444

(800) 322-3616

Fax: (256) 882-0859

www.vmic.com

The following Application and Configuration Guides are available from VMIC to assist in the selection, specification, and implementation of systems based upon VMIC's products:

Title	Document No.
Digital Input Board Application Guide	825-000000-000
Change-of-State Application Guide	825-000000-002
Digital I/O (with Built-in-Test) Product Line Description	825-000000-003
Synchro/Resolver (Built-in-Test) Subsystem Configuration Guide	825-000000-004
Analog I/O Products (with Built-in-Test) Configuration Guide	825-000000-005
Connector and I/O Cable Application Guide	825-000000-006

Artisan Technology Group - Quality Instrumentation ... Guaranteed | (888) 88-SOURCE | www.artisantg.com

Safety Summary

The following general safety precautions must be observed during all phases of the operation, service and repair of this product. Failure to comply with these precautions or with specific warnings elsewhere in this manual violates safety standards of design, manufacture and intended use of this product.

VMIC assumes no liability for the customer's failure to comply with these requirements.

Ground the System

To minimize shock hazard, the chassis and system cabinet must be connected to an electrical ground. A three-conductor AC power cable should be used. The power cable must either be plugged into an approved three-contact electrical outlet or used with a three-contact to two-contact adapter with the grounding wire (green) firmly connected to an electrical ground (safety ground) at the power outlet.

Do Not Operate in an Explosive Atmosphere

Do not operate the system in the presence of flammable gases or fumes. Operation of any electrical system in such an environment constitutes a definite safety hazard.

Keep Away from Live Circuits

Operating personnel must not remove product covers. Component replacement and internal adjustments must be made by qualified maintenance personnel. Do not replace components with power cable connected. Under certain conditions, dangerous voltages may exist even with the power cable removed. To avoid injuries, always disconnect power and discharge circuits before touching them.

Do Not Service or Adjust Alone

Do not attempt internal service or adjustment unless another person capable of rendering first aid and resuscitation is present.

Do Not Substitute Parts or Modify System

Because of the danger of introducing additional hazards, do not install substitute parts or perform any unauthorized modification to the product. Return the product to VMIC for service and repair to ensure that safety features are maintained.

Dangerous Procedure Warnings

Warnings, such as the example below, precede only potentially dangerous procedures throughout this manual. Instructions contained in the warnings must be followed.

WARNING: Dangerous voltages, capable of causing death, are present in this system. Use extreme caution when handling, testing and adjusting.

Artisan Technology Group - Quality Instrumentation ... Guaranteed | (888) 88-SOURCE | www.artisantg.com

Warnings, Cautions and Notes

STOP informs the operator that a practice or procedure should not be performed. Actions could result in injury or death to personnel, or could result in damage to or destruction of part or all of the system.

WARNING denotes a hazard. It calls attention to a procedure, practice or condition, which, if not correctly performed or adhered to, could result in injury or death to personnel.

CAUTION denotes a hazard. It calls attention to an operating procedure, practice or condition, which, if not correctly performed or adhered to, could result in damage to or destruction of part or all of the system.

NOTE denotes important information. It calls attention to a procedure, practice or condition which is essential to highlight.

Artisan Technology Group - Quality Instrumentation ... Guaranteed | (888) 88-SOURCE | www.artisantg.com

Artisan Technology Group - Quality Instrumentation ... Guaranteed | (888) 88-SOURCE | www.artisantg.com

CHAPTER

1

Theory of Operation

Contents

Internal Functional Organization 22
Control Interface 23
Data Buffer Memory 25
Operating Modes 26
Analog Input Multiplexing, Sampling and Digitizing 27
Power Converter 31

Introduction

This section describes the internal organization of the VMIVME-3128 board, and reviews the general principles of operation. *Internal Functional Organization* on page 22 summarizes the major board functions, and the remainder of this chapter addresses each function individually. The information in this section is supplemented by programming details in Chapter 3.

Artisan Technology Group - Quality Instrumentation ... Guaranteed | (888) 88-SOURCE | www.artisantg.com

Internal Functional Organization

The VMIVME-3128 board contains the following principal hardware functions, as shown in Figure 1-1 on page 24:

- Analog input multiplexing and digitizing
- VMEbus interface
- Scan timing and control
- Data and gain buffers
- Interval timer and channel counter
- Bus interrupter
- Power converter

An analog multiplexer, a programmable amplifier, and a 14-bit A/D Converter digitize the analog input channels, and the digitized values are stored in a dual-ported data buffer for access from the VMEbus. ***Low pass input filters*** minimize the effects of system noise and eliminate high frequency signal components which would otherwise cause aliasing problems. Dual ***sample-and-hold amplifiers*** pipeline alternate odd and even channels, to obtain maximum throughput by acquiring each channel while the preceding channel is digitized. The conversion rate is constant at 17 µs for all operating modes except the single scan random access mode (*Operating Modes* on page 26). Operating modes are described in detail in Chapter 3. Regulated ±15 VDC power for the analog networks is obtained from the 5 VDC bus through a DC-to-DC Converter.

A separate ***gain buffer*** permits the input gain of each channel to be assigned individually. Gain codes ($0 = x1, $1 = x10, $2 = x100) are first loaded into the gain buffer from the bus, and the gain for each channel is then used during the scanning process. Programmable ***fixed gain jumpers*** provide a fixed gain for all channels if software programmable gain is not required.

Control signals and data transfers take place through the VMEbus P1 connector. ***VMEbus interface logic*** controls data transfers through the P1 interface, and latches the operating mode parameters. Status monitoring and sequence timing are supported by a ***bus interrupter*** and ***programmable timer***, both of which are controlled from the bus. Scan timing logic controls the analog input scanning process, uses the gain buffer to adjust input gain, and routes digitized channel data to the data buffer.

Artisan Technology Group - Quality Instrumentation ... Guaranteed | (888) 88-SOURCE | www.artisantg.com

Control Interface

Board Selection

VMEbus data transfer requests are accepted when the **board-selection comparator** detects a match between the on-board selection jumpers shown in Figure 1-1 on page 24, and the address and address modifier lines from the backplane. When a match is detected, the board responds with a data transfer, after which the open-collector DTACK interface signal is asserted (LOW). DTACK returns to the negated (HIGH) state when the transfer has been completed. During an interrupt response, DTACK is provided by the interrupt controller.

Read/Write Operations

Data Bus lines D00 through D15 are bidirectional and move data to or from the board through a 16-bit ***data transceiver*** in response to control signals from ***interface timing and control logic***. The data transceiver isolates the VMEbus data lines from the ***internal data bus***. Address lines **A12** through **A23** map the board into either the short I/O A16 space or the standard A24 space. Data transfer control signals from the VMEbus determine whether data is moved to the board (Write) or from the board (Read). Both D8 (EO) and D16 transfers are supported.

The Control and Status Register (***CSR***) establishes the operational mode of the board and selects the input channel during random access A/D conversions. The Buffer Control Register (***BCR***) controls the size of the data buffer and the number (block) of channels being scanned.

Bus Interrupter

Access to the VMEbus interrupt structure is provided through a ***bus interrupter***. If the interrupt is enabled, an interrupt is generated in response to a request either by the scan timing logic as a data ready flag, or by the channel counter after a specific number of buffer locations have been updated. The interrupt function is implemented with a Motorola MC68153 Bus Interrupter Module (BIM). Details of the interrupter capabilities are described in Chapter 3.

Interval Timer and Channel Counter

A triple 16-bit counter device contains the ***interval timer*** and ***channel counter***. Two of the counter sections are driven from an 8 MHz clock, and can be cascaded as a 32-bit timer for delays up to 536 s. Timed data acquisition bursts (*Analog Input Multiplexing, Sampling and Digitizing* on page 27 and *Operating Modes* on page 64) occur periodically at the interval programmed into the interval timer. The channel counter can be programmed to generate an interrupt after a programmed number of data buffer locations have been updated, or can be read directly to serve as a data pointer.

Artisan Technology Group - Quality Instrumentation ... Guaranteed | (888) 88-SOURCE | www.artisantg.com

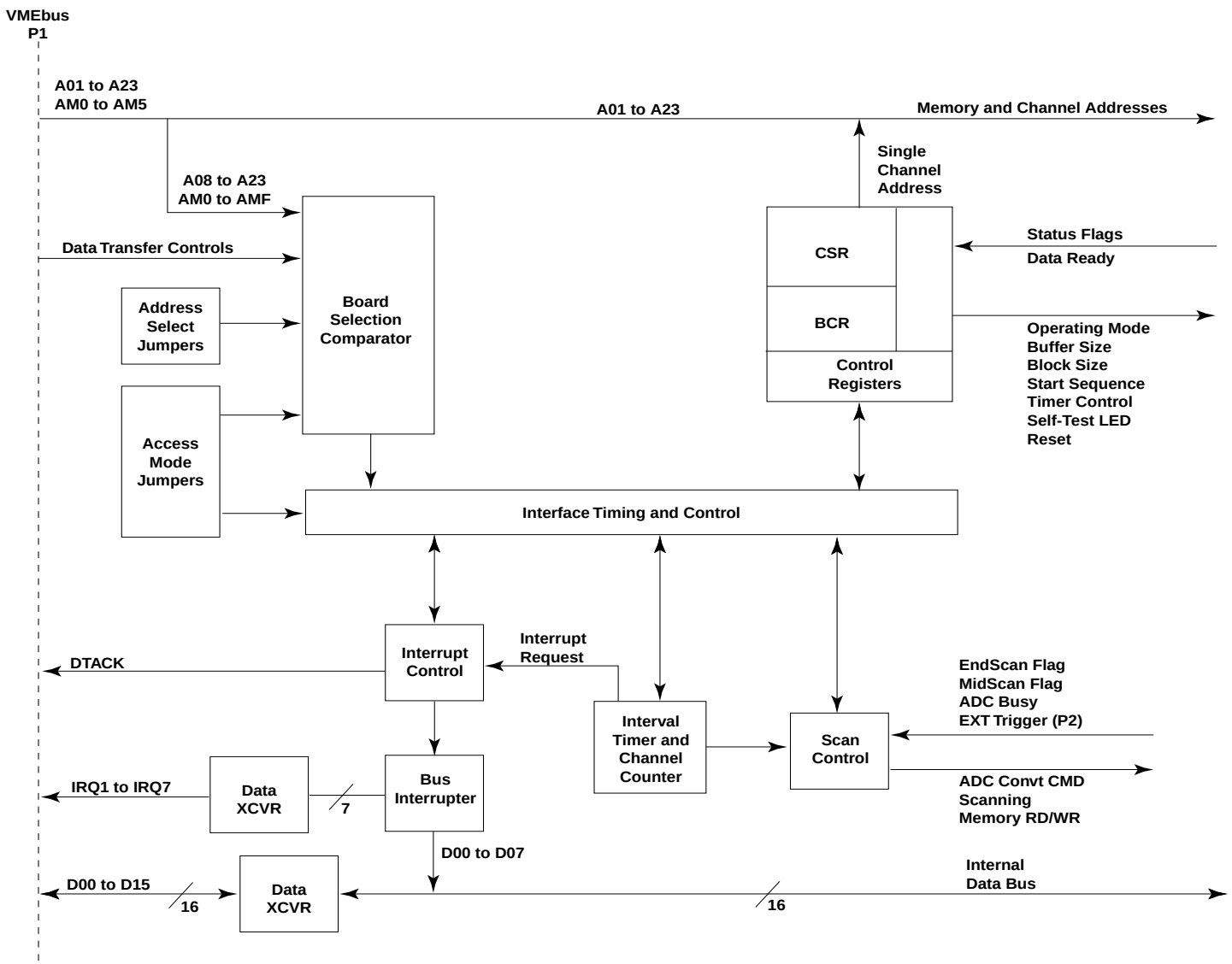

Figure 1-1 VMEbus Interface Logic

Artisan Technology Group - Quality Instrumentation ... Guaranteed | (888) 88-SOURCE | www.artisantg.com

Data Buffer Memory

Organization and Control

Digitized inputs are stored in a 16-bit ***data buffer***, the size of which can be software configured from 16 data words to 1,024 data words. Data in the buffer is organized into consecutive ***channel blocks***, each of which represents a complete scan of all active channels. Both buffer size and block size are controlled by the ***BCR***. The input channels are sampled consecutively, starting with channel 00 located at the bottom (lowest address) of each block in the buffer, and proceeding through the highest channel at the top of the block.

Total data memory buffer size is 2,048 words. The remaining memory that is not used for storage of scanning input data may be used as on-board scratch pad memory.

Data Storage and Retrieval

The data buffer can be loaded or read from the bus at any time. ***Arbitration*** for the buffer occurs at the beginning of an update from the A/D Converter. If the converter has control of the memory when a bus transfer is initiated, the transfer will be extended by approximately 250 ns while the buffer update is completed.

If a bus transfer is in progress when a converter access is requested, the bus transfer will proceed normally and the converter access will take place after the transfer has been completed. Because the converter access must be completed before the scanning sequence can continue, a long data transfer (greater than 600 ns) may extend the 17 µs channel update period.

A ***data ready flag*** is set at the top, or highest address, of the buffer, and can be programmed to occur also at the middle of the buffer. The data ready flag can initiate an interrupt request, or can be read from the bus as a status flag.

Artisan Technology Group - Quality Instrumentation ... Guaranteed | (888) 88-SOURCE | www.artisantg.com

Operating Modes

All operating modes available with the VMIVME-3128 are controlled through the CSR and BCR. Operating modes are described in detail in Chapter 3, and are summarized here as:

- Continuous scanning
- Single scan random access
- Timed burst
- Locally triggered burst
- Remotely triggered burst
- Gain loading

Continuous scanning is selected by clearing both mode control bits in the CSR (*Control Registers* on page 57), and is the default selection after a reset operation. All active channels are scanned continuously in this mode. A single channel can be selected at random for conversion in the ***single channel random access mode***. The resulting digitized value is read from a dedicated Converter Data Register (CDR).

Three operating modes acquire data in bursts with each burst representing an entire update of the data buffer. ***Timed burst*** data is acquired in a single data scan, or burst, of all buffer locations when the interval timer times out. A single burst can be acquired at the end of the programmed interval, or the process can be repetitive. In the repetitive mode, a burst is acquired at the end of each interval until either a different mode is selected, or the interval timer is disabled by clearing CSR bit D09. Timer control is described in *Timer/Counter Control* on page 68.

Two "triggered burst" modes generate a single burst each time a trigger occurs. In the ***locally triggered burst*** mode, the trigger occurs when the "start sequence" control bit in the CSR is set (*Control Registers* on page 57). In the ***remotely triggered burst*** mode, the trigger occurs at the falling edge of the EXT STRT L digital input at the P2 connector.

Remotely triggered burst capability permits multiple boards to be synchronized. All boards will begin each scan simultaneously together. Multiboard synchronization is obtained by connecting the TRIG OUT L output from P2 of a synchronizing "master" to the EXT STRT L input of all slave boards. As many as 16 boards in a single chassis can be synchronized together.

If automatic selection of channel gain (autogain) is required, the gain code for each channel is loaded into the gain buffer while operating in the ***gain loading*** mode (see *Internal Functional Organization* on page 22 for more information).

Artisan Technology Group - Quality Instrumentation ... Guaranteed | (888) 88-SOURCE | www.artisantg.com

Analog Input Multiplexing, Sampling and Digitizing

Input Configuration

Analog inputs from connectors P3 and P4 are routed through low pass ***input filters*** to the input multiplexers shown in Figure 1-2 on page 28. Channels 00 to 31 are connected through P4 and channels 32 to 63 are connected through P3.

To provide at least one ground in each of the input connectors, the LOW inputs for channels 31 and 63 can be jumpered individually to either AGND or COMM, or can be left ungrounded (*Operational Configuration* on page 36 and *Connector Descriptions* on page 47). AGND is the internal analog ground, and COMM is a bus which connects all center row (B row) pins together on P3 and P4. The COMM bus provides a return connection for all channels if 96-wire cables are used for the analog inputs.

The ***analog multiplexers*** route one of each group of eight channels to the PGA multiplexers, which in turn selects an input to route to the PGA. Input address lines A0, A1, and A2 control the input multiplexer, and A3, A4, and A5 select the PGA multiplexer input.

Crosstalk and common-mode errors are minimized by discharging the multiplexer node between input channel selections. As each channel is selected, any residual charge left on the node capacitance, ***Cn***, from the preceding channel would produce a small error voltage across the input filter capacitor. The ***multiplexer discharge switch*** is closed for approximately 1.5 µs between channel selections, and removes the residual charge before a new channel is selected.

At high scanning rates, the node capacitance appears as a pure resistance to the analog inputs, and the resistance is inversely proportional to the scan repetition rate. When operating in the **continuous scan** mode with a 64-channel block size, node capacitance in the VMIVME-3128 produces an effective input resistance of approximately 2 MΩ.

Artisan Technology Group - Quality Instrumentation ... Guaranteed | (888) 88-SOURCE | www.artisantg.com

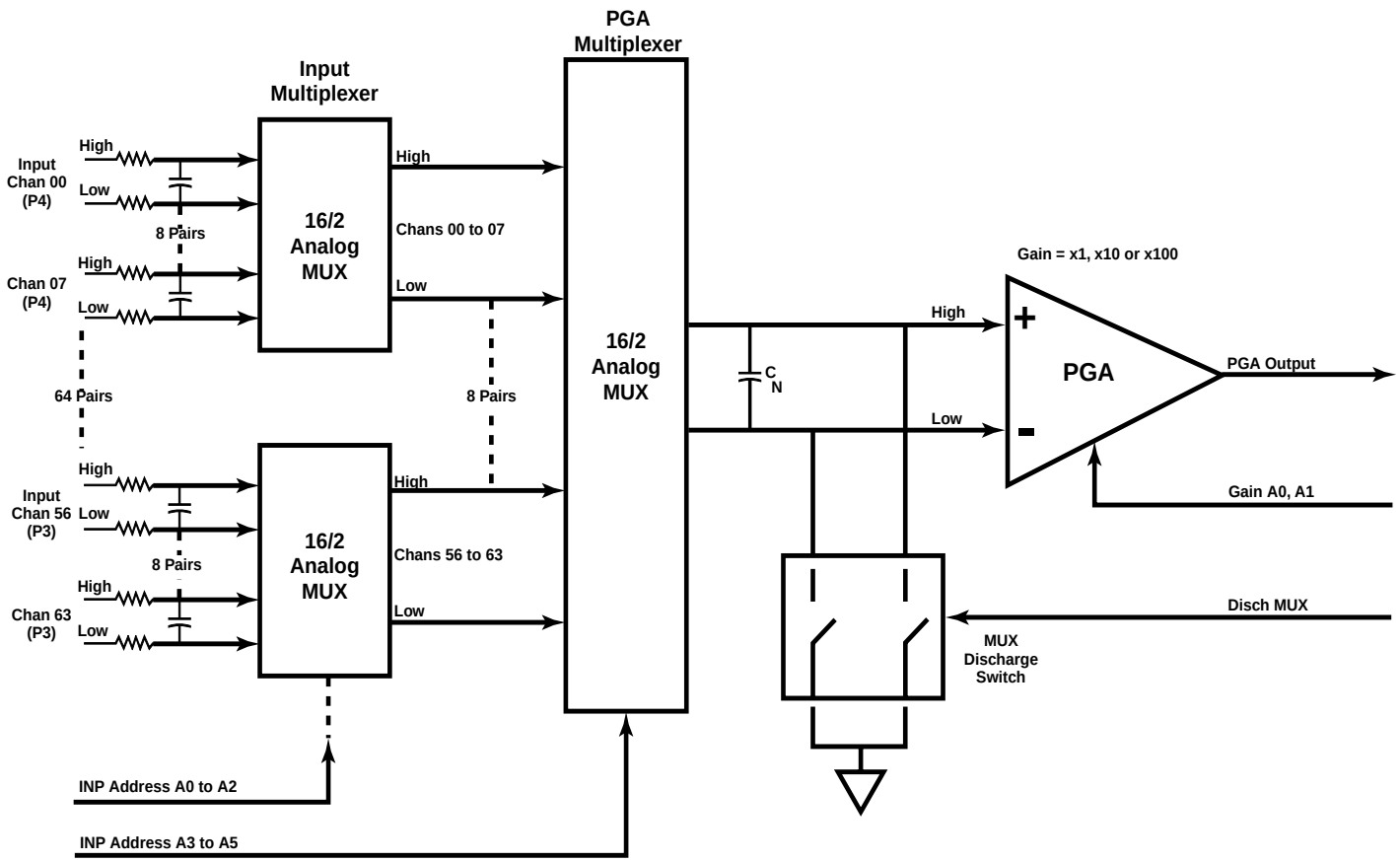

Figure 1-2 Analog Multiplexer and PGA

Gain Control

The Programmable Gain Amplifier (*PGA*) applies a gain of x1, x10, or x100 to the differential channel from the PGA multiplexer, and produces a single-ended output. PGA gain is selected by the GAIN A0 and A1 control lines which originate either from the gain buffer, or from fixed gain jumpers (see *Internal Functional Organization* on page 22).

Sampling and Digitizing

Dual ***sample-and-hold (S&H) amplifiers*** shown in Figure 1-3 on page 30 provide the pipelined sampling that is required in order to use the maximum conversion rate available with the A/D Converter. While one of the two amplifiers holds a sample for the converter, the other amplifier acquires the next channel to be converted. ***Analog switches*** select the output from the amplifier which is in the "hold" state, and a fast ***unity gain buffer*** provides the low source impedance required by the converter.

Figure 1-3 on page 30 shows the VMIVME-3128 pipeline timing. The S&H amplifiers and the analog switches are controlled by the complementary ***Hold A*** and ***Hold B*** lines which alternate as each successive channel is digitized. A ***convert command*** is issued shortly after each transition of the Hold A/B lines. After the conversion is completed, a ***read ADC*** strobe stores the digitized value in the data buffer.

Analog-to-Digital Conversion

The output of the unity gain buffer is digitized by the 14-bit successive approximation ***A/D Converter*** shown in Figure 1-3 on page 30. Each conversion is initiated by the convert command, and the ***Read ADC*** strobe writes the digitized value to the data buffer through the ***internal data bus***. Total conversion time is 15 µs. The additional 2 µs in each 17 µs conversion cycle is used for housekeeping operations such as starting and reading the converter.

Artisan Technology Group - Quality Instrumentation ... Guaranteed | (888) 88-SOURCE | www.artisantg.com

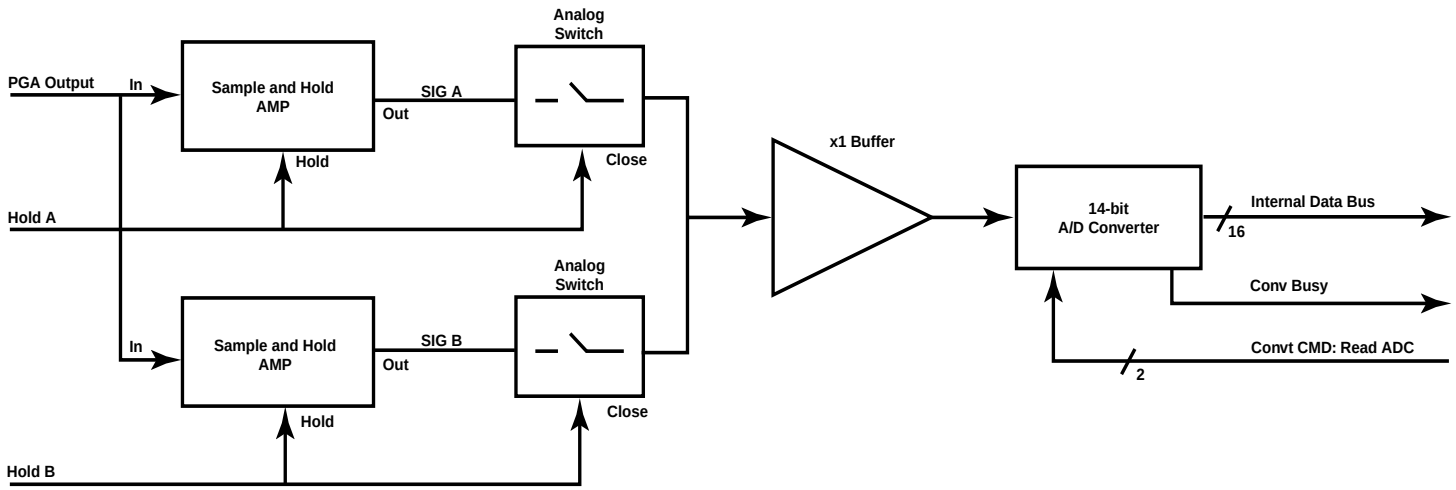

a. Analog Sampling and Digitizing

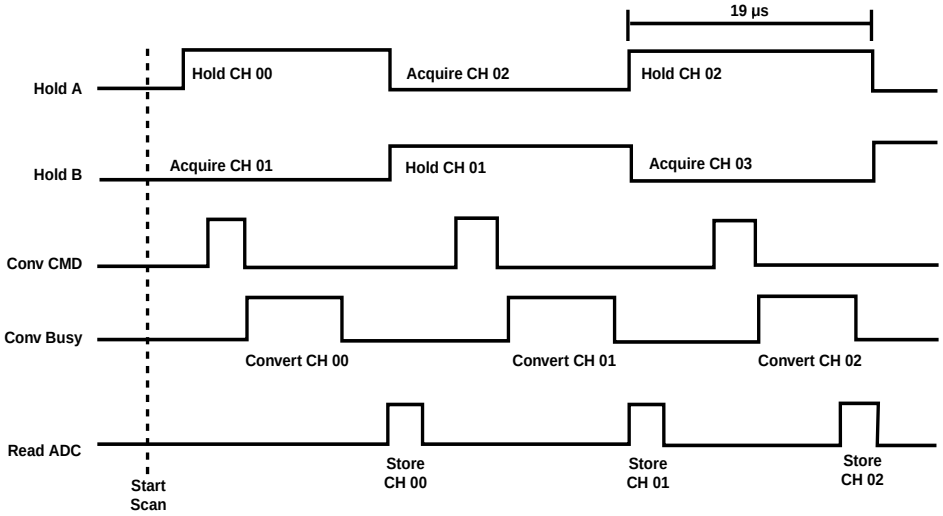

b. Scan Timing (Not to Scale)

Figure 1-3 Pipelined A/D Conversion

Artisan Technology Group - Quality Instrumentation ... Guaranteed | (888) 88-SOURCE | www.artisantg.com

Power Converter

Electrical power for the analog networks is supplied by a single DC-to-DC Converter which converts 5 VDC logic power from the VMEbus into isolated and regulated ±15 VDC. This method is used so that this product does not require the optional ±12 V on the VMEbus backplane.

Artisan Technology Group - Quality Instrumentation ... Guaranteed | (888) 88-SOURCE | www.artisantg.com

Artisan Technology Group - Quality Instrumentation ... Guaranteed | (888) 88-SOURCE | www.artisantg.com

CHAPTER

2

Configuration and Installation

Contents

Unpacking Procedures 34
Physical Installation. 35
Operational Configuration 36
Calibration. 42
Connector Descriptions. 47
System Considerations 52

Introduction

This chapter describes the installation and configuration of the board. Cable configuration, jumper/switch configuration and board layout are illustrated in this chapter.

Artisan Technology Group - Quality Instrumentation ... Guaranteed | (888) 88-SOURCE | www.artisantg.com

Unpacking Procedures

CAUTION: Some of the components assembled on VMIC's products may be sensitive to electrostatic discharge and damage may occur on boards that are subjected to a high-energy electrostatic field. When the board is placed on a bench for configuring, etc., it is suggested that conductive material should be inserted under the board to provide a conductive shunt. Unused boards should be stored in the same protective boxes in which they were shipped.

Upon receipt, any precautions found in the shipping container should be observed. All items should be carefully unpacked and thoroughly inspected for damage that might have occurred during shipment. The board(s) should be checked for broken components, damaged printed circuit board(s), heat damage, and other visible contamination. All claims arising from shipping damage should be filed with the carrier and a complete report sent to VMIC together with a request for advice concerning the disposition of the damaged item(s).

Artisan Technology Group - Quality Instrumentation ... Guaranteed | (888) 88-SOURCE | www.artisantg.com

Physical Installation

CAUTION: Do not install or remove the boards while power is applied.

De-energize the equipment and insert the board into an appropriate slot of the chassis. While ensuring that the board is properly aligned and oriented in the supporting card guides, slide the board smoothly forward against the mating connector until firmly seated.

Before Applying Power: Checklist

Before applying power to the VMEbus chassis in which the board is installed, execute the following checklist to ensure that the board has been correctly prepared for operation.

1. Verify that the sections pertaining to programming and configuration, Chapters 2 and 3, have been reviewed and applied to system requirements._____
2. Review *Operational Configuration* on page 36 and Table 2-1 on page 38 to verify that all jumpers are configured correctly for the application._____
3. Verify that the I/O cables are properly terminated for the input/output connectors. Refer to *Connector Descriptions* on page 47. _____
4. Physical installation should have been completed as described above. _____
5. Ensure that all system cable connections are correct._____

Artisan Technology Group - Quality Instrumentation ... Guaranteed | (888) 88-SOURCE | www.artisantg.com

Operational Configuration

VMEbus access modes and analog input configurations are controlled by field replaceable jumpers. This section describes the use of these jumpers, and their effects on board performance. Locations and functions of all VMIVME-3128 jumpers are shown in Figure 2-1 on page 37 and Table 2-1 on page 38. Typical jumper configurations are summarized in Table 2-2 on page 39.

Factory-Installed Jumpers

Each VMIVME-3128 board is configured at the factory with the specific jumper arrangement shown in Table 2-1 on page 38. The ***factory configuration*** establishes the following functional baseline for the VMIVME-3128 board, and ensures that all essential jumpers are installed.

- Board Identification is located at *$0000* in the ***short I/O space***, with either ***supervisory or nonprivileged*** access
- Automatic gain control
- ±10 V range
- Differential inputs
- External trigger I/O is enabled
- Input COMM bus is connected to analog return (AGND)
- LOW inputs for channels 31 and 63 are disconnected from COMM and AGND

Artisan Technology Group - Quality Instrumentation ... Guaranteed | (888) 88-SOURCE | www.artisantg.com

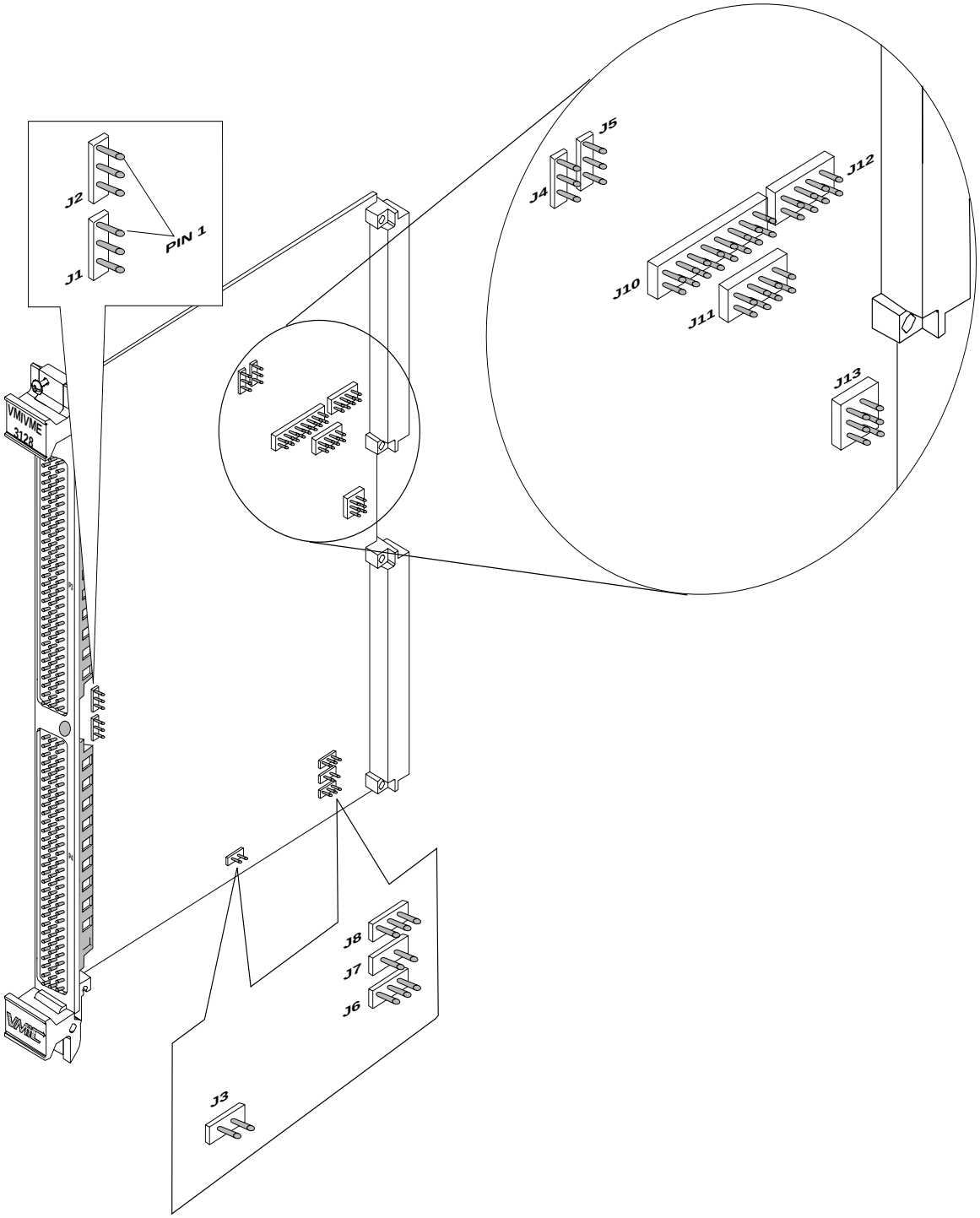

Figure 2-1 VMIVME-3128 Location of User-Configurable Jumpers

Artisan Technology Group - Quality Instrumentation ... Guaranteed | (888) 88-SOURCE | www.artisantg.com

Table 2-1 Programmable Jumper Functions

Jumper IDENT	Function (Installed)	Fact CONFIG
J11-1,2	Short I/O Operation	Installed
J11-3,4	Supervisory (Supervisory) Access	Installed
J11-5,6	User (Nonprivileged) Access	Installed
J11-7,8	Data Access	Installed
J12-1,2	Address Bit A12 = 0	Installed
J12-3,4	Address Bit A13 = 0	Installed
J12-5,6	Address Bit A14 = 0	Installed
J12-7,8	Address Bit A15 = 0	Installed
J10-1,2	Address Bit A16 = 0	Installed
J10-3,4	Address Bit A17 = 0	Installed
J10-5,6	Address Bit A18 = 0	Installed
J10-7,8	Address Bit A19 = 0	Installed
J10-9,10	Address Bit A20 = 0	Installed
J10-11,12	Address Bit A21 = 0	Installed
J10-13,14	Address Bit A22 = 0	Installed
J10-15,16	Address Bit A23 = 0	Installed
J4-1,2	Gain A1 = 0	Removed
J4-2,3	Gain A1 = Automatic	Installed
J5-1,2	Gain A0 = 0	Removed
J5-2,3	Gain A0 = Automatic	Installed
J6-1,2	Bipolar Analog Inputs	Installed
J6-2,3	Unipolar Analog Inputs	Removed
J7	±2.5 V or 0 to +5 V Ranges	Removed
J8-1,2	±10 V Range	Installed
J8-2,3	±2.5 V, 0 to +5 V, ±5 V, 0 to +10 V Ranges	Removed
J13-1,2	External Trigger Enabled	Installed
J13-3,4	External Trigger Enabled	Installed
J13-5,6	External Trigger Enabled	Installed
J3	Input COMM Grounded to AGND	Installed
J1-1,2	Ch 31 LOW Input Conn to AGND	Removed
J1-2,3	Ch 31 LOW Input Conn to COMM	Removed
J2-1,2	Ch 63 LOW Input Conn to AGND	Removed
J2-2,3	Ch 63 LOW Input Conn to COMM	Removed

Artisan Technology Group - Quality Instrumentation ... Guaranteed | (888) 88-SOURCE | www.artisantg.com

Example of Jumper J10 through J12 Configuration

For: Standard Memory Access;
Supervisory Only;
Data Space
Address $00D1 F000

Table 2-2 Typical Jumper Configurations

Jumper	State	Position*
J11-1,2	STD MEMORY	Removed
J11-3,4	SPVSR	Installed
J11-5,6	USER	Removed
J11-7,8	DATA	Installed
J12-1,2	A12=1	REMOVED
J12-3,4	A13=1	REMOVED
J12-5,6	A14=1	REMOVED
J12-7,8	A15=1	REMOVED
J10-1,2	A16=1	REMOVED
J10-3,4	A17=0	INSTALLED
J10-5,6	A18=0	INSTALLED
J10-7,8	A19=0	INSTALLED
J10-9,10	A20=1	REMOVED
J10-11,12	A21=0	INSTALLED
J10-13,14	A22=1	REMOVED
J10-15,16	A23=1	REMOVED

Input Gain				
Jumper	**x1**	**x10**	**x100**	**Auto**
J4	1,2	1,2	REM	2,3
J5	1,2	REM	1,2	2,3

ADC Voltage Range*					
Jumper	**±10 V**	**±5 V**	**±2.5 V**	**0 TO +10 V**	**0 TO +5 V**
J6	1,2	1,2	1,2	2,3	2,3
J7	REM	REM	INS	REM	INS
J8	1,2	2,3	2,3	2,3	2,3

Artisan Technology Group - Quality Instrumentation ... Guaranteed | (888) 88-SOURCE | www.artisantg.com

External Trigger *		
Jumper	**Enabled**	**Disabled**
J13 (All)	INS	REM
NOTE: * "INS" = Jumper installed, "REM" = Jumper removed.		

Access Modes

Supervisory (privileged) access is selected by installing J11-3,4, and user (nonprivileged) access is selected by installing J11-5,6. Installing both J11-3,4 and J11-5,6 selects either supervisory ***or*** user access. J11 also permits memory operation in the A24 memory space to be designated for either ***data access*** (J11-7, 8 installed) or ***program access*** (J11-7,8 removed).

NOTE: To be consistent with conventional VMEbus development system nomenclature, hexadecimal numbers in this document are designated a "$" prefix unless otherwise indicated. Decimal numbers are presented without a prefix.

Board Location in Short I/O or Memory Space

Jumper J11 selects operation in either the ***short I/O A16 space*** with J11-1, 2 installed, or in the ***standard A24 memory space*** with J11-1,2 removed (see *General Control Features* on page 56). Jumper blocks J10 and J12 locate the board on any 4,096-word boundary in the A16 or A24 space.

The board address is programmed by installing shorting plugs at all "zero" or LOW address bit positions in jumper blocks J10 and J12, and by omitting the shorting plugs at the "one" or HIGH positions. Address bit A12 is the least significant address bit that can be jumper-selected, and has a weight of 4,096 words.

Analog Input Gain

Jumpers J4 and J5 control the ***analog input gain***, as shown in Table 2-2 on page 39. Jumper-selected gains of x1, x10, and x100 are fixed and apply to all input channels. The AUTO gain configuration places the gain of each input channel under software control (see *Data Organization and Control* on page 61).

Converter Voltage Range

The ***A/D Converter voltage range*** is controlled by jumpers J6, J7, and J8 as shown in Table 2-2 on page 39.

Artisan Technology Group - Quality Instrumentation ... Guaranteed | (888) 88-SOURCE | www.artisantg.com

Input Voltage Range

The input voltage range (full-scale voltage at the input of each channel) is determined by both the ***analog input gain*** and the ***A/D Converter voltage range***:

INPUT VOLTAGE RANGE = CONVERTER VOLTAGE RANGE ÷ INPUT GAIN

For example, an input gain of x10 combined with a converter voltage range of ±5 V produces an input voltage range of ±500 mV (±0.5 V).

External Triggering

The selection of either internal or external triggering of single scan is under software control (Section 4.5). Jumper block J13 connects the trigger signals at the P2 connector to the internal control logic, and usually is configured with all jumpers installed as shown in Table 2-1 on page 38. If the application does not require external triggering, all J13 jumpers can be removed. If external triggering has been selected through software, and if all J13 jumpers are installed, a data scan begins at the HIGH to LOW transition of the EXT STRT L input at P2.

Input Configurations

The analog inputs can be configured as single-ended, differential or pseudo-differential channels, as shown in Table 2-3 on page 42. The configurations are selected in groups of four consecutive channels by the positions of jumpers J1, J2, and J3, and by the locations of SIP (single-in-line-package) resistor networks.

In pseudo-differential operation, the LOW input for channels 31 or 63 acts as the external return. Input configurations can be mixed in groups of four channels with no restriction except that the pseudo-differential operation of any group commits either channels 31 or 63 also as pseudo-differential.

Internal Ground Connections

All pins in the center "B" rows of both input connectors P3 and P4 are connected together as the COMM return, and provide a ground path and interchannel guards between differential input pairs when 96-wire 0.033-inch ribbon cables are used. The COMM return can be connected to the internal analog ground (AGND) by installing jumper J3.

The LOW input for channels 31 or 63 can be connected to AGND by installing J1-1,2 (channel 31) or J2-1,2 (channel 63), or to the COMM return by installing J1-2,3 or J2-2,3. Installation of either of these jumpers configures the associated channel as a ***single-ended*** input. Each jumper must be removed entirely for differential operation of the associated channel.

Artisan Technology Group - Quality Instrumentation ... Guaranteed | (888) 88-SOURCE | www.artisantg.com

Calibration

Before delivery from the factory, the VMIVME-3128 board is fully calibrated and conforms to all specifications listed in the Specification. Should recalibration be required, refer to *Equipment Required* on page 44 and the *Calibration Procedure* on page 44, perform the indicated procedures in the order shown. The locations of test points and adjustments are shown in Figure 2-2 on page 43.

Table 2-3 Input Configuration Selection

Input Configuration (Note 1)									
P4 Channel Group	**Single-Ended**			**Differential**			**Pseudo-Diff**		
	SIP POS (Note 2)	**Jumpers**		**SIP POS (Note 2)**	**Jumpers**		**SIP POS (Note 2)**	**Jumpers**	
		J1	**J2**		**J1**	**J2**		**J1**	**J2**
00 to 03	RP33	1,2	---	RP1	---	---	RP33	2,3	---
04 to 07	RP34	1,2	---	RP3	---	---	RP34	2,3	---
08 to 11	RP35	1,2	---	RP5	---	---	RP35	2,3	---
12 to 15	RP36	1,2	---	RP7	---	---	RP36	2,3	---
16 to 19	RP37	1,2	---	RP9	---	---	RP37	2,3	---
20 to 23	RP38	1,2	---	RP11	---	---	RP38	2,3	---
24 to 27	RP39	1,2	---	RP13	---	---	RP39	2,3	---
28 to 31	RP40	1,2	---	RP15	REM	---	RP40	2,3	---
	CH 31 is Single-End						Return is CH 31 Low		

Input Configuration (Note 1)									
P3 Channel Group	**Single-Ended**			**Differential**			**Pseudo-Diff**		
	SIP POS (Note 2)	**Jumpers**		**SIP POS (Note 2)**	**Jumpers**		**SIP POS (Note 2)**	**Jumpers**	
		J1	**J2**		**J1**	**J2**		**J1**	**J2**
32 to 35	RP41	---	1,2	RP17	---	---	RP41	---	2,3
36 to 39	RP42	---	1,2	RP19	---	---	RP42	---	2,3
40 to 43	RP43	---	1,2	RP21	---	---	RP43	---	2,3
44 to 47	RP44	---	1,2	RP23	---	---	RP44	---	2,3
48 to 51	RP45	---	1,2	RP25	---	---	RP45	---	2,3
52 to 55	RP46	---	1,2	RP27	---	---	RP46	---	2,3
56 to 59	RP47	---	1,2	RP29	---	---	RP47	---	2,3
60 to 63	RP48	---	1,2	RP31	---	REM	RP48	---	2,3
	CH 63 is Single-End						Return is CH 63 Low		

NOTES:
1.Jumper positions are indicated as: 1,2 Shorting plug between pins 1 and 2.
2,3 Shorting plug between pins 2 and 3.
REM Shorting plug removed.
--- "Don't care;" shorting plug can be installed or removed.
2."SIP POS" = "Single-in-line-package position." The indicated position is one of two possible locations for the input SIP. Only one of the two locations is occupied. For example, the SIP for channel groups 00 to 03 can be located as either RP33 or RP1.

Artisan Technology Group - Quality Instrumentation ... Guaranteed | (888) 88-SOURCE | www.artisantg.com

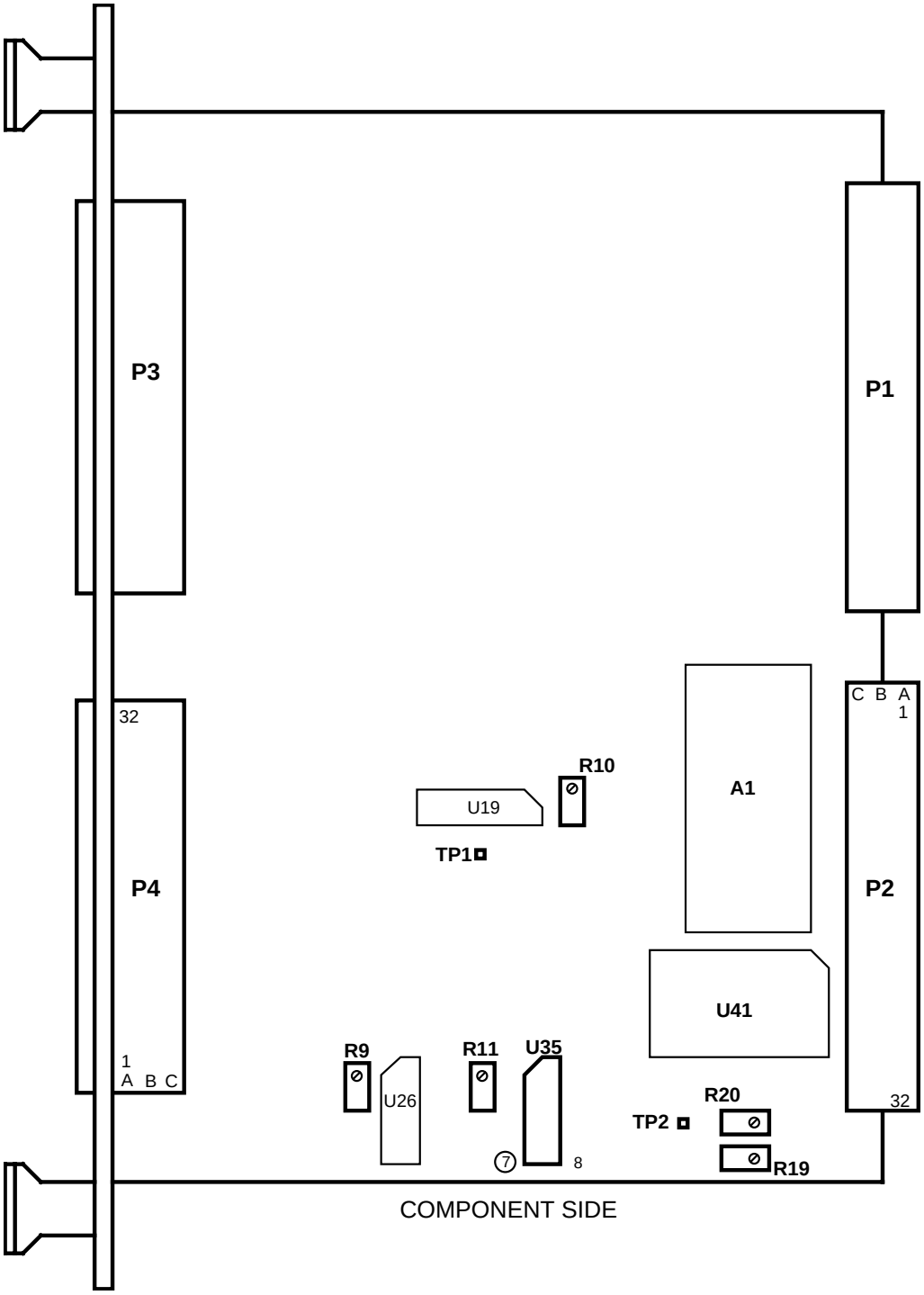

Figure 2-2 Locations of Test Points and Adjustments

Artisan Technology Group - Quality Instrumentation ... Guaranteed | (888) 88-SOURCE | www.artisantg.com

Equipment Required

1. Digital Voltmeter (DVM) - 1.000 and 10.000 VDC ranges; 5 or more digits; ±0.003 percent of reading measurement accuracy; 10 M_ minimum input impedance.
2. Digital Voltage Source - 10.000 VDC ±0.001 VDC voltage source; ±0.003 percent setting resolution and accuracy. 10 _ maximum source resistance.
3. Chassis - VMEbus backplane or equivalent, with J1 connector, 68000 Series master controller, +5 ±0.1 VDC, 7 A (reserve current) power supply. One slot allocated for testing the VMIVME-3128 board.
4. Extender Board - VMEbus extender board

CAUTION: Do not install or remove this board with power applied to the system.

Calibration Procedure

1. Restore all program jumpers to the factory configuration, as shown in Table 2-1 on page 38.
2. Locate the board at an address that is compatible with the VMEbus operating system. Install jumpers J4, and J5-1,2 to select a PGA gain of x1.
3. Install the VMIVME-3128 board on an extender board in the VMEbus chassis.
4. Apply power to the chassis backplane. Allow a minimum warmup interval of ten minutes before proceeding.
5. Connect the digital voltage source to the channel 00 and channel 01 input pins P4-A1, A2 (+) and P4-C1, C2 (-). Adjust the voltage source output to 0.0000 VDC.
6. Connect the digital voltmeter between TP1 (+) and TP2 (-).
7. Write the following data to the indicated board relative addresses:

Address	Data	Register	Mode
$0002	$C000	CSR	Reset
$0002	$8040	CSR	Random Access mode, multiplexer discharged

8. Adjust potentiometer R10 for a digital voltmeter indication of 0.0000 VDC ±0.0020 VDC.
9. Move the voltmeter positive test lead to U35-7.
10. Adjust R11 for a voltmeter indication of 0.0000 VDC ±0.0020 VDC.
11. Remove the digital voltmeter test connection.

Artisan Technology Group - Quality Instrumentation ... Guaranteed | (888) 88-SOURCE | www.artisantg.com

12. Write the following data to the indicated board relative addresses:

ADDRESS	DATA	REGISTER	MODE
$0002	$C000	CSR	Reset
$0002	$8000	CSR	Continuous scanning

13. Read and display board word locations $0080 repetitively, at 3 to 5 readings/s.
14. With the voltage source output adjusted to -9.9988 VDC, adjust R19 until the value displayed at location $0080 varies between $0000 and $0004.
15. With the voltage source output adjusted to +9.9988 VDC, adjust R20 until the value displayed at location $0080 varies between $FFF8 and $FFFC.
16. Repeat steps *14* and *15* until both values are correct.
17. With the voltage source output adjusted to 0.0000 VDC, adjust R19 until the value displayed at location $0080 varies between $7FFC and $8000.
18. With the voltage source output adjusted to 0.0000 VDC, adjust R9 until the value displayed at location $0082 varies between $7FFC and $8000.
19. Remove the J4 jumper. Verify that J5-1,2 is installed.
20. Adjust R10 until the value displayed at location $0080 varies between $7FFC and $8000
21. Calibration is completed. To perform the functional verification, retain the existing test configuration and proceed to *Functional Verification* below.

Functional Verification

This procedure tests the Programmable Gain Amplifier (PGA), and verifies the integrity of all input channels. Steps *1* through *5* are identical to steps *1* through *5* in the *Calibration Procedure* on page 44, and can be omitted if the calibration procedure has been performed within the previous hour, and if power has not been removed from the board.

1. Restore all program jumpers to the factory configuration, as shown in Table 2-1 on page 38.
2. Locate the board at an address that is compatible with the VME operating system. Install jumpers J4-1,2 and J5-1,2 to select minimum PGA gain (x1).
3. Install the VMIVME-3128 on an extender board in the VMEbus chassis.
4. Apply power to the chassis backplane. Allow a minimum warmup interval of ten minutes before proceeding.
5. Connect the digital voltage source to the channel 00 input pins P4-A1 (+) and P4-C1 (-). Adjust the voltage source output to 0.0000 VDC.

Artisan Technology Group - Quality Instrumentation ... Guaranteed | (888) 88-SOURCE | www.artisantg.com

6. Write the following data to the indicated board relative addresses:

ADDRESS	DATA	REGISTER	MODE
$0002	$C000	CSR	Reset
$0002	$8000	CSR	Continuous scanning

7. Read and display board word location $0080 (input channel 00) repetitively, at 3 to 5 readings/s.
8. Verify that jumper J4 is removed and that J5-1,2 is installed. Adjust the voltage source output to +99.219 mVDC, and verify that the displayed value is between $FED0 and $FF30.
9. Remove the J5 jumper. Install jumper J4-1,2 to select a gain of x10.
10. Adjust the voltage source output to +992.19 mVDC, and verify that the displayed value is between $FED0 and $FF30.
11. Install jumper J5-1,2 to select a gain of x1. Verify that J4-1,2 is installed.
12. Adjust the voltage source output to +9.9219 VDC, and verify that the displayed value is between $FEFC and $FF04.
13. Refer to the P3 and P4 connector descriptions in Table 2-4 on page 47 to determine the input pairs used in the remainder of this procedure.
14. Move the digital voltage source test leads to the channel 01 input pins. Connect the positive test lead to the A row pin, and the negative test lead to the C row pin.
15. Change the address of the displayed data to $0082 (input channel 01). Verify that the displayed value is between $FEFC and $FF04.
16. Repeat steps *14* and *15* for the remaining channels 02 through 63. Increase the displayed address by $0002 for each successive channel, to a maximum address of $00FE for channel 63.
17. Functional verification is completed. Remove power from the board. Remove all test connections. Restore the board to the factory configuration, as shown in Table 2-1 on page 38.

Artisan Technology Group - Quality Instrumentation ... Guaranteed | (888) 88-SOURCE | www.artisantg.com

Connector Descriptions

Connector Functions

Electrical connections to the VMIVME-3128 board are made through four 96-pin DIN connectors P1 through P4, all of which have the pin configuration shown in Figure 2-3 on page 49 and Figure 2-4 on page 50.

P1 connects the VMIVME-3128 board to the VMEbus backplane, and contains the address, data, and control lines, and all additional signals necessary to control VMEbus functions related to the board. P2 provides the user pins necessary for external synchronization of the board. User pin assignments are listed in Table 2-4 below and Table 2-5 on page 48.

Table 2-4 Input/Output Connector Pin Assignments

P2 Connector User Pins		
Pin Number	**Input/Output Signal**	
	Row A	**Row C**
01 to 26	N / C	N / C
27	EXT STRT L	N / C
28	EXT STRT RTN	N / C
29	TRIG OUT L	N / C
30	N / C	N / C
31	EN EXT STRT H	N / C
32	N / C	N / C

Artisan Technology Group - Quality Instrumentation ... Guaranteed | (888) 88-SOURCE | www.artisantg.com

Table 2-5 P4 and P3 Connector Pinouts

P4 Connector				P3 Connector			
Pin Number	Input Signal			Pin Number	Input Signal		
	Row A	Row B	Row C		Row A	Row B	Row C
01	CH 00 High	COMM	CH 00 Low	01	CH 32 High	COMM	CH 32 Low
02	CH 01 High	COMM	CH 01 Low	02	CH 33 High	COMM	CH 33 Low
03	CH 02 High	COMM	CH 02 Low	03	CH 34 High	COMM	CH 34 Low
04	CH 03 High	COMM	CH 03 Low	04	CH 35 High	COMM	CH 35 Low
05	CH 04 High	COMM	CH 04 Low	05	CH 36 High	COMM	CH 36 Low
06	CH 05 High	COMM	CH 05 Low	06	CH 37 High	COMM	CH 37 Low
07	CH 06 High	COMM	CH 06 Low	07	CH 38 High	COMM	CH 38 Low
08	CH 07 High	COMM	CH 07 Low	08	CH 39 High	COMM	CH 39 Low
09	CH 08 High	COMM	CH 08 Low	09	CH 40 High	COMM	CH 40 Low
10	CH 09 High	COMM	CH 09 Low	10	CH 41 High	COMM	CH 41 Low
11	CH 10 High	COMM	CH 10 Low	11	CH 42 High	COMM	CH 42 Low
12	CH 11 High	COMM	CH 11 Low	12	CH 43 High	COMM	CH 43 Low
13	CH 12 High	COMM	CH 12 Low	13	CH 44 High	COMM	CH 44 Low
14	CH 13 High	COMM	CH 13 Low	14	CH 45 High	COMM	CH 45 Low
15	CH 14 High	COMM	CH 14 Low	15	CH 46 High	COMM	CH 46 Low
16	CH 15 High	COMM	CH 15 Low	16	CH 47 High	COMM	CH 47 Low
17	CH 16 High	COMM	CH 16 Low	17	CH 48 High	COMM	CH 48 Low
18	CH 17 High	COMM	CH 17 Low	18	CH 49 High	COMM	CH 49 Low
19	CH 18 High	COMM	CH 18 Low	19	CH 50 High	COMM	CH 50 Low
20	CH 19 High	COMM	CH 19 Low	20	CH 51 High	COMM	CH 51 Low
21	CH 20 High	COMM	CH 20 Low	21	CH 52 High	COMM	CH 52 Low
22	CH 21 High	COMM	CH 21 Low	22	CH 53 High	COMM	CH 53 Low
23	CH 22 High	COMM	CH 22 Low	23	CH 54 High	COMM	CH 54 Low
24	CH 23 High	COMM	CH 23 Low	24	CH 55 High	COMM	CH 55 Low
25	CH 24 High	COMM	CH 24 Low	25	CH 56 High	COMM	CH 56 Low
26	CH 25 High	COMM	CH 25 Low	26	CH 57 High	COMM	CH 57 Low
27	CH 26 High	COMM	CH 26 Low	27	CH 58 High	COMM	CH 58 Low
28	CH 27 High	COMM	CH 27 Low	28	CH 59 High	COMM	CH 59 Low
29	CH 28 High	COMM	CH 28 Low	29	CH 60 High	COMM	CH 60 Low
30	CH 29 High	COMM	CH 29 Low	30	CH 61 High	COMM	CH 61 Low
31	CH 30 High	COMM	CH 30 Low	31	CH 62 High	COMM	CH 62 Low
32	CH 31 High	COMM	CH 31 Low*	32	CH 63 High	COMM	CH 63 Low*

NOTE: * Channels 31 and 63 Low inputs can be jumpered individually to either COMM or AGND returns.

Artisan Technology Group - Quality Instrumentation ... Guaranteed | (888) 88-SOURCE | www.artisantg.com

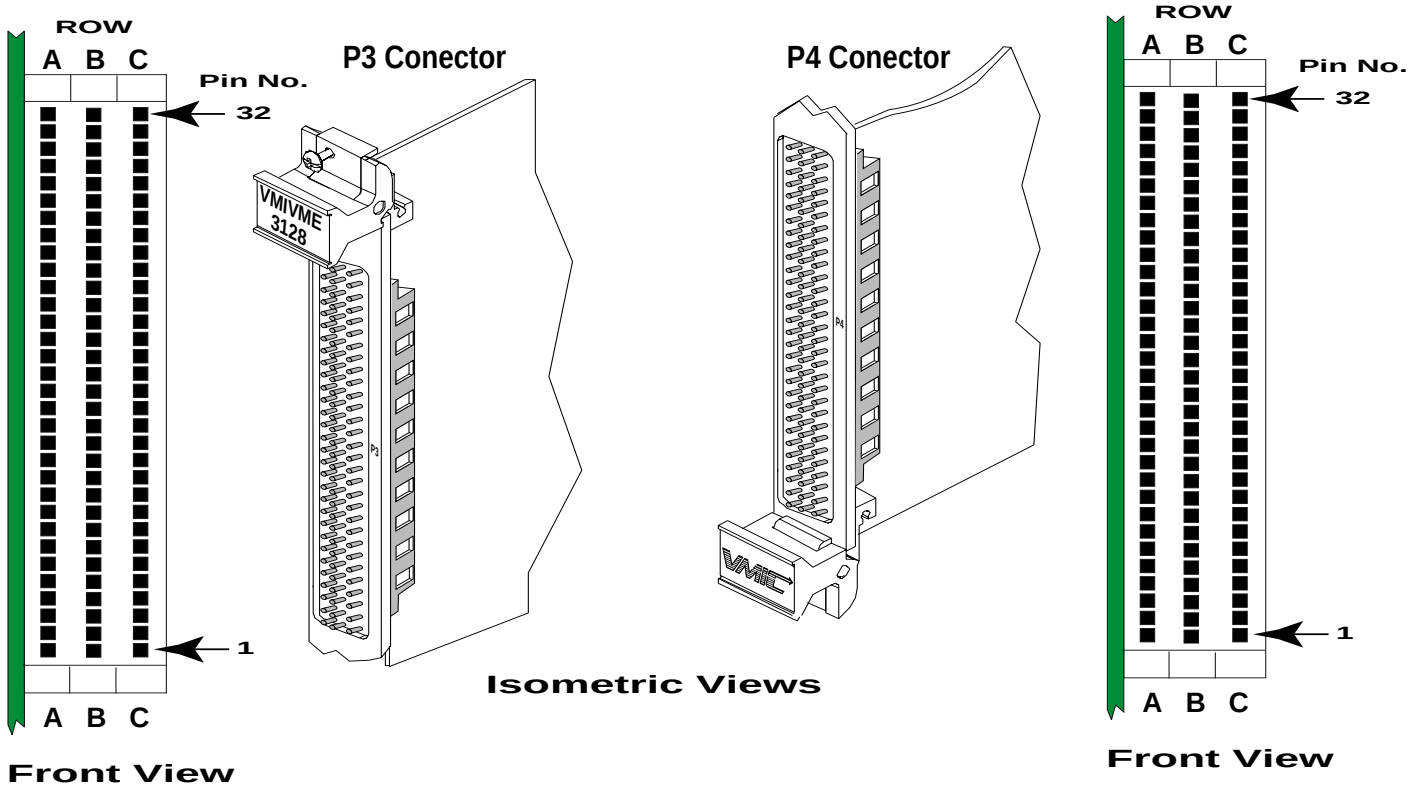

Figure 2-3 P3 and P4 Connector Pin Configuration

Artisan Technology Group - Quality Instrumentation ... Guaranteed | (888) 88-SOURCE | www.artisantg.com

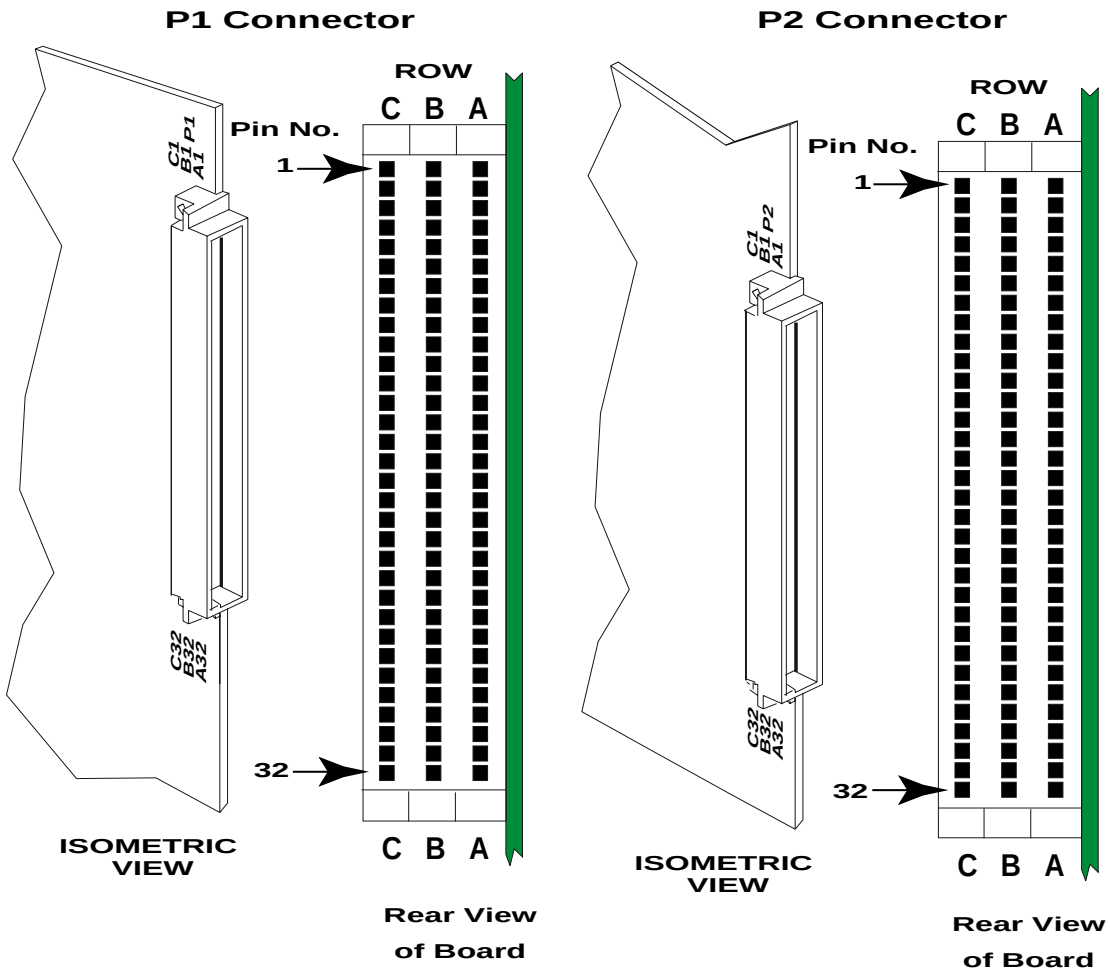

Figure 2-4 P1 and P2 Connector Pin Configuration

Input Modes

Analog inputs are connected to the board through front panel connectors P3 and P4. P4 contains the input pins for channels 00 to 31, and P3 contains the input pins for channels 32 to 63. Pin assignments for P3 and P4 are summarized in Table 2-5 on page 48. The center "B" rows in P3 and P4 are connected together to a COMM bus, which can be used as a guard bus for 96-wire cables. Refer to *Input Configurations* on page 41 and Table 2-3 on page 42 for the selection of ***single-ended***, ***differential***, or ***pseudo-differential*** input configurations.

Artisan Technology Group - Quality Instrumentation ... Guaranteed | (888) 88-SOURCE | www.artisantg.com

Input Cables

If 96-wire 0.033-inch ribbon cables or discrete wire type cables are used for the analog inputs, the center row COMM bus can provide a ground reference to the analog return (AGND) on the board by installing Jumper J3. If 64-wire 0.050-inch ribbon cables are used, "VARI TWIST" or equivalent twisted-pair cables are recommended to minimize crosstalk and induced noise. Access to AGND is available in 64-wire cables at pin C32 of P3 and P4 by installing J1-1,2 for P4, or J2-1, 2 for P3.

External Synchronization

External TTL-level synchronization triggers are connected to the EXT STRT L input at the P2 connector (refer to *External Triggering* on page 41). The EN EXT STRT H output is a flag to the triggering device that the VMIVME-3128 is ready to accept an external trigger. To synchronize multiple VMIVME-3128 boards together, connect the TRIG OUT H output from the designated "master" board to the EXT STRT L input of all boards to be synchronized to the master.

Artisan Technology Group - Quality Instrumentation ... Guaranteed | (888) 88-SOURCE | www.artisantg.com

System Considerations

Applications with Signal Conditioning Boards

The VMIVME-3128 board serves as a multiplexer / digitizer for signal conditioning boards such as the VMIVME-3413 32-Channel Low-Level Input Board. The output connectors on the signal conditioning boards are configured to cable directly to either P3 or P4 on the VMIVME-3128.

When used with signal conditioning boards, the VMIVME-3128 is configured with either differential or pseudo-differential inputs, and with a low-input gain of x1 or x10. These applications should utilize the 1.6 kHz input filter option.

Operation with Direct Analog Inputs

When used without signal conditioning input boards, the VMIVME-3128 board provides direct full-scale input ranges from ±25 mV to ±10 V. The optimum input filter for these applications is the 50 Hz filter, although the 10 Hz filter will provide improved attenuation of power line frequency interference at the expense of decreased common-mode rejection. To minimize the effects of direct input multiplexing, the source impedance of analog inputs should not exceed 1,500Ω for the ±10 V input range, or 10Ω for the ±25 mV range. Use the lowest input gain and the largest block size (see *Data Block* on page 61) that are practical for the application.

If inputs are obtained directly from remote sources, the grounding scheme used can have a major affect on system performance. Each system has its own unique interference considerations, but the following general guidelines will apply in most cases.

1. Long Input Lines: Long input lines (greater than 10 feet), or inputs from grounded sources (sources which are not floating), should be connected to ***differential inputs***, and overall shields should be extended from the input sources to as close to the board as possible. ***Single-ended inputs*** are susceptible to ground loop errors, and should be used only with high-level floating sources.
2. Source Impedance: Use signal sources with the lowest available source impedances. Susceptibility to crosstalk and induced interference increases as the source impedance increases.
3. Floating Signal Sources: The shield from a floating signal source (RTD, strain gage, etc.) should be connected to the LOW (negative) terminal at the source. For low impedance sources (less than 10Ω), or for sources which are protected from interference fields, connect the board end of the shield to analog return (AGND) at the board. For high impedance sources, connect all shield terminals of the sources together, and leave the board ends of the shields open.
4. Grounded Signal Sources: Outputs of grounded sources (sources which are not floating) must be referenced to a common ground which ensures that the input voltage will not exceed the input range (± 10 V) of the board. Shields from

Artisan Technology Group - Quality Instrumentation ... Guaranteed | (888) 88-SOURCE | www.artisantg.com

grounded sources should be connected to the LOW terminal of the sources, and left open at the board.

5. Unused Inputs: Unused inputs within each group of eight channels (0 through 7, 8 through 15, etc.) should be connected to a common ground to avoid interference with active channels. Grounding of unused 8-channel groups is not essential, but will assist in minimizing susceptibility to system noise.

Artisan Technology Group - Quality Instrumentation ... Guaranteed | (888) 88-SOURCE | www.artisantg.com

Artisan Technology Group - Quality Instrumentation ... Guaranteed | (888) 88-SOURCE | www.artisantg.com

CHAPTER

3

Programming

Contents

General Control Features 56
Control Registers 57
Data Organization and Control 61
Operating Modes 64
Scan Monitoring 66
Bus Interrupter 67
Timer / Counter Control. 68
Typical Programming Examples 72

Controlling the VMIVME-3128

VMEbus communication takes place through Control, Status, and Data Registers which can be jumper-located in either the A16 short I / O space or the A24 standard address space. A resident bus interrupter is under program control and can be configured to generate any interrupt request from IRQ1 through IRQ7.

Digitized input data is accumulated in a dual-port data buffer which consists of from 16 to 1,024 data words, where each data word contains the 14-bit digitized value of a single analog input channel. Data accumulates in the buffer in blocks of from 16 to 64 input channels. Buffer size and block size both are under program control, and the buffer can be read at any time without affecting the scanning sequence.

Data scaling is adjustable with jumper-controlled voltage ranges, and with either jumper-controlled or program-controlled channel gain. A Data Ready flag can be programmed to occur when the buffer is either filled or half-filled. An interrupt can be generated simultaneously with the Data Ready flag, or after a specific number of samples have been acquired.

The analog inputs can be scanned continuously or in triggered data bursts. Bursts (single scans) can be acquired automatically at intervals up to 536 s, or can be triggered by an external event. Single channel random access is also supported.

References to programming jumpers are made throughout this section. Jumper installation requirements are described in Chapter 2 "*Configuration and Installation*".

Artisan Technology Group - Quality Instrumentation ... Guaranteed | (888) 88-SOURCE | www.artisantg.com

General Control Features

Addressing Modes and Board Location

Programmable address jumpers permit the VMIVME-3128 board to be located in either the short I/O (A16) space or the standard address (A24) space. The board can be located on any 4,096-word boundary. Board operation is jumper-configured in either program space or data space. Access privilege is jumper-designated as either short supervisory, short nonprivileged, or both.

Data Transfers

Registers at addresses $0000 to $0026 respond to both D08 and D16 data transfers, within the limitations described in *Control Registers* on page 57. Data buffer locations can be *read* with either D8 (EO) or D16 transfers, but *should be written* with D16 transfers. Any register or buffer location can be accessed at any time without affecting the existing scanning sequence, although data transfers longer than 600 ns may extend conversion times.

Reset Operations and Initialization

All Control Registers are reset either by a system reset operation or by setting the software reset control bit D14 in the CSR. Either reset operation initializes the board to the following configurations:

- Continuous scanning operating mode
- 64-channel block size
- 64 data word buffer size
- Automatic gain set to x1
- Offset binary data coding
- Self-test LED ON
- Data Ready flag at end-of-buffer
- Interrupt disabled

The automatic gain codes for all channels will be initialized to "zero" (gain = x1) after a reset operation, as described in *Gain Initialization Preload* on page 63. If the automatic gain mode has been jumper-selected, channel gains other than x1 must be initialized as described in *Gain Loading* on page 65.

Conventions

Hexadecimal Notation: To be consistent with conventional VMEbus development system nomenclature, hexadecimal numbers throughout this document are indicated with the prefix "$" unless otherwise indicated, and are expressed in byte "$XX," word "$XXX," or longword "$XXXX XXXX" formats. Decimal numbers are presented without a designating prefix.

Logic States: This document uses the convention that a data bit or control line is "set" when it is in the "one," or HIGH state, and is "cleared" when "zero" or LOW.

Artisan Technology Group - Quality Instrumentation ... Guaranteed | (888) 88-SOURCE | www.artisantg.com

Control Registers

Register designations and locations are summarized in Table 3-1 below.

Table 3-1 VMIVME-3128 Board Register Map

Register Address (HEX)	Register Designation	DESIG	Access	Notes
$0000	Board IDentification	BID	R	2
$0002	Control and Status	CSR	R/W	
$0004	Buffer Control	BCR	R/W	3
$0006 TO $000E	(Reserved)			
$0010	Interrupt Control	ICR	R/W	3
$0012 TO $0016	(Reserved)			
$0018	Interrupt Vector	IVR	R/W	3
$001A TO $001E	(Reserved)			
$0020	Internal Timer 0	TR0	R/W	3
$0022	Internal Timer 1	TR1	R/W	3
$0024	Data Counter	DCR	R/W	3
$0026	Timer/Counter Control	TCR	R/W	3
$0028 TO $007E	(Reserved)			
$0080 TO $087E	Data Buffer	BUFF	R/W	4,5
$0880 TO $0FFE	Scratch Pad Memory	RAM	R/W	

NOTES: 1.Unless indicated otherwise, all registers are 16-bit words.
2.D08 to D15.
3.D00 to D07.
4.Buffer location $0080 is replaced with the Gain Code Buffer Register when operating in the gain loading mode, or the Converter Data Register when operating in the random access mode.
5. See “Data Buffer/RAM” on page 63..

Board Identification Register (BID)

The Board Identification Register (BID) contains the board identification code ($49XX) for the VMIVME-3128 board, and occupies the upper eight data bits at board relative location $0000. This code can be used during system configuration to identify the board as a VMIVME-3128.

Artisan Technology Group - Quality Instrumentation ... Guaranteed | (888) 88-SOURCE | www.artisantg.com

Control and Status Register (CSR)

CSR functions are summarized in Table 3-2. All control register bits are mapped directly to the Status Register. The CSR can be accessed with either D8 or D16 data transfers, and provides control and monitoring of the following board functions:

- Random access channel selection
- Operating mode
- Scan sequence start
- Timer and flag control
- Data Ready flag
- Data coding
- Board reset
- Self-test LED

Table 3-2 Control and Status Register (CSR) Bit Map

MSB	Control and Status Register						LSB
Bit 15	**Bit 14**	**Bit 13**	**Bit 12**	**Bit 11**	**Bit 10**	**Bit 09**	**Bit 08**
Self-Test LED L	Software Reset H	Two's Compl H	Data Ready H (Status only)	EN Midscan Flag H	EN External Start H	EN Interval Timer H	Start Sequence H

Bit 07	Bit 06	Bit 05	Bit 04	Bit 03	Bit 02	Bit 01	Bit 00
MODE 1 H	MODE 0 H	INP A5 H	INP A4 H	INP A3 H	INP A2 H	INP A1 H	INP A0 H

Control and Status Register (CSR) Bit Definitions

Bit 15: **Self-Test LED** - The "Self-Test" LED is OFF if Bit 15 is set, or ON if Bit 15 is cleared.

Bit 14: **Software Reset** - All board functions are reset when Bit 14 is set. Bit 14 is cleared automatically when reset has been completed.

Bit 13: **Two's Compl** - Digitized input data is presented in offset binary format if Bit 13 is cleared, or in two's complement format if Bit 13 is SET.

Bit 12: **Data Ready (Status Only)** - Bit 12 is set according to: (a) the selected operating mode, (b) the Enable Midscan Flag (Bit 11), and (c) the status of the scanning sequence. An interrupt can be programmed to occur when Data Ready is set. Bit 12 is cleared automatically by the first data register access.

Operating Mode	Bit 11	Bit 07	Bit 06	Condition for Sstting Data Ready
Random Access	X	0	1	End-of-Conversion
Single or Autoscan	0	X	0	Data Buffer filled
Single or Autoscan	1	X	0	Data Buffer half-filled
Gain Loading	X	1	1	Data Ready not active

Artisan Technology Group - Quality Instrumentation ... Guaranteed | (888) 88-SOURCE | www.artisantg.com

Control and Status Register Bit Definitions (Continued)

Bit 11: **Enable Midscan Flag** - Bit 11 controls the occurrence of the Data Ready flag (Bit 12) in the Single Scan and Autoscan operating modes.

Bit 10: **Enable External Timer** - When Bit 10 is set, the selected operating sequence is initiated by the falling edge of the External Start input at P2. Bit 10 permits multiple VMIVME-3128 boards to be synchronized together to a single external signal.

Bit 09: **Enable Interval Timer** - The Autoscan Interval Timer operates when Bit 09 is set, and is disabled when Bit 09 is cleared. The selected operating sequence is initiated at the end of each interval. Bit 09 has no effect if Bit 10 is set.

Bit 08: **Start Sequence** - Random Access or Single Scan operation initiates when D08 is SET. Bit 08 has no effect if either Bit 09 or Bit 10 is set. Bit 08 is cleared automatically after sequence initiation.

Bits 07 and 06: **Mode [1:2]** - Bit 07 and Bit 06 select the operating sequence mode as:

D07	D06	Operating Mode
0	0 *	Autoscanning
0	1	Random Access to any channel for conversion
1	0	Single Scan of data buffer
1	1	Gain Loading of AUTOGAIN channel-gain codes
NOTE: * Default mode at reset.		

Bits 05 through 00: **Input Channel Select [INP A5:A0]** - Bits 00 through 05 select an input channel for random access.

Artisan Technology Group - Quality Instrumentation ... Guaranteed | (888) 88-SOURCE | www.artisantg.com

Buffer Control Register (BCR)

Block size and data buffer size are controlled by the BCR, as shown in Table 3-3 on page 61. The BCR also controls the size of the interval timer as either 16 or 32 bits, and determines whether an interrupt will be generated by the data ready flag or by the channel counter.

Interrupter Registers

The Interrupter Control and Vector Registers are used to establish the interrupt parameters, and to enable or disable the interrupt. The Interrupter registers are described in *Bus Interrupter* on page 67.

Timer/Counter Registers

The Timer / Counter Registers control three 16-bit counters, two of which are available for adjusting the time between scans in the timed-burst operating mode, and one of which can provide an interrupt at a specific data word count. These registers are described in *Timer/Counter Control* on page 68.

Converter Data Register (CDR)

A / D Converter data is read from the CDR when the board is operating in the **random access** mode (*Single Channel Random Access* on page 65).

Artisan Technology Group - Quality Instrumentation ... Guaranteed | (888) 88-SOURCE | www.artisantg.com

Data Organization and Control

Data Word

The contents of each 16-bit word location in the data buffer is a ***data word***, and represents the 14-bit left-justified digitized value of a single analog input channel.

Scaling and Coding

Table 3-4 on page 62 shows the data word scaling and coding for all three available channel gains of x1, x10, and x100. Data Bit 15 is the most significant bit and Bit 00 is the least significant bit. Coding is straight binary or offset binary if CSR Bit 13 is cleared, and is two's complement if CSR Bit 13 is set.

Data Block

A complete set of digitized values for all active input channels is a ***data block***, and it can consist of 16, 32, 48, or 64 channels. Block size is controlled by Bits 00 and 01 in the BCR, as shown in Table 3-3 below. Data words within a block are organized with channel 00 at the lowest address in the block, and with the highest numbered channel at the highest address.

Table 3-3 Buffer Control Register

BIT 00 and BIT 01	**Input Block Size (Number of Active Channels)**			
	BIT 01	**Bit 00**	**Block Size**	**Active Input Channels**
	0	0	*64 Channels	00 Through 63
	0	1	48	00 Through 48
	1	0	32	00 Through 31
	1	1	16	00 Through 15
Bit 02 Through Bit 04	**Input Buffer Size (Total Data Storage)**			
	Bit 04	**Bit 03**	**Bit 02**	**Buffer Size (dec)**
	0	0	0	*64 Words
	0	0	1	16
	0	1	0	32
	0	1	1	64
	1	0	0	128
	1	0	1	256
	1	1	0	512
	1	1	1	1,024
Bit 05	**Interval Timer Select (Number of Cascaded 16-bit Timers)**			
	Bit 05	**Number of Timers**		
	0	*1		
	1	2		
Bit 06	**Interrupt Source Control**			
	Bit 06	**Interrupt Source**		
	0	*Data Ready Flay (CSR)		
	1	Channel Counter		
Bit 07	**Not Used**			
NOTE: * Default mode at reset.				

Artisan Technology Group - Quality Instrumentation ... Guaranteed | (888) 88-SOURCE | www.artisantg.com

Table 3-4 ADC Data Format and Coding

Bit 15 (MSB)	Bit 14	Bit 13	Bit 12	Bit 11	Bit 10	Bit 09	Bit 08
ADC13	ADC 12	ADC 11	ADC 10	ADC 09	ADC 08	ADC 07	ADC 06

Bit 07	Bit 06	Bit 05	Bit 04	Bit 03	Bit 02 (LSB)	Bit 01	Bit 00
ADC 05	ADC 04	ADC 03	ADC 02	ADC 01	ADC 00	0	0

Table 3-5 ADC Data Format

ADC Data Coding (Gain = x1)			
Unipolar Range		**Straight Binary**	
Input	**0 to +10 V**	**MSB**	**LSB**
+FS-1 LS	+9.99939 V	1111 1111 1111 11	
+1/2 FS	+5.00000 V	1000 0000 0000 00	
+1 LSB	+0.00061 V	0000 0000 0000 01	
Bipolar Range		**Offset Binary**	
Input	**±10V**	**MSB**	**LSB**
+FS-1 LSB	+9.99878 V	1111 1111 1111 11	
+1/2 FS	+5.00000 V	1100 0000 0000 00	
+1 LSB	+0.00122 V	1000 0000 0000 01	
Zero	0.00000 V	1000 0000 0000 00	
-1 LSB	-0.00122V	0111 1111 1111 11	
-FS+1 LSB	-9.99878 V	0000 0000 0000 01	
-FS	-10.00000 V	0000 0000 0000 00	
Bipolar Range		**Two's Complement**	
Input	**±10V**	**MSB**	**LSB**
+FS-1 LSB	+9.99878 V	1111 1111 1111 11	
+1/2 FS	+5.00000 V	0100 0000 0000 00	
+1 LSB	+0.00122 V	0000 0000 0000 01	
Zero	0.00000 V	0000 0000 0000 00	
-1 LSB	-0.00122V	0111 1111 1111 11	
-FS+1 LSB	-9.99878 V	1000 0000 0000 01	
-FS	-10.00000 V	1000 0000 0000 00	
	LSB Bit Weight Versus Input Gain		
Input Range	**Gain = x1**	**x10**	**x100**
0 to +5 V, ±2.5 V	305.176 µV	30.5176 µV	3.05176 µV
0 to +10 V, ±5 V	610.352 µV	61.0352 µV	6.10352 µV
±10 V	1.22070 mV	122.070 µV	12.2070 µV

Artisan Technology Group - Quality Instrumentation ... Guaranteed | (888) 88-SOURCE | www.artisantg.com

Data Buffer/RAM

The ***data buffer*** contains from 1 to 64 data blocks, and is located at board address $0080. The size of the buffer is controlled by the Input Buffer Size bits (Bits 02 to 04) in the BCR. The buffer can be adjusted from 16 to 1,024 data words in six equal ratios of 2:1. A single update of all locations in the buffer is a ***data scan***, and is executed at the maximum A/D conversion rate of 58 kHz. Data blocks within the buffer are organized with the first block located at the lowest word address in the buffer, and with the data word in the last block located at the highest address.

Total on-board RAM size is 2,048 words. Memory locations $0880 through $0FFE may be used as scratch pad memory. Also, memory not used for storage of scanning input data may be used as on-board scratch pad memory.

Gain Selection

A fixed channel gain of x1, x10, or x100 can be jumper-selected for all channels, or can be assigned individually for each channel. A jumper-selected gain applies to all channels and cannot be modified by the program. The automatic gain mode provides program control of the gain of each channel.

For automatic gain control, a gain code for each channel is loaded into board memory while operating in the Gain Loading mode (*Gain Loading* on page 65). The gain is adjusted automatically as each channel is selected and digitized. Gain codes for all channels are initialized to "zero" (gain = x1) automatically after a reset operation.

Gain Initialization Preload

Directly after each reset operation, an automatic initialization sequence presets all gain codes to "zero," and establishes a gain of x1 for all channels. The sequence is approximately 1.2 ms in length and is completed when the data ready flag (CSR Bit 12) is set at the end of the first buffer scan. During this initialization interval, the gain buffer should not be accessed from the VMEbus and the Enable Midscan Flag control bit (CSR Bit 11) should not be set.

Artisan Technology Group - Quality Instrumentation ... Guaranteed | (888) 88-SOURCE | www.artisantg.com

Operating Modes

The VMIVME-3128 board can be programmed to scan the input channels continuously, to read input channels individually, or to acquire data in timed or synchronized bursts. Table 3-6 summarizes the various operating modes, all of which are described in this section.

Continuous Scanning

This ***default*** operating mode is selected by a reset operation, or by clearing both CSR Mode control bits. All active channels are scanned continuously in this mode, and any channel can be read at any time without affecting the scanning operation. (also see *Reset Operations and Initialization* on page 56.)

Table 3-6 Operating Mode Selection

	CSR Control Bits					CSR Code (Note 1)		
Operating Mode	**Bit 10**	**Bit 09**	**Bit 08**	**Bit 07**	**Bit 06**		**Initiation**	**Termination**
Continuous Scanning (Note 2)	0	0	0	0	0	$8000	Select Mode	Change Mode
Random Access	0	0	1	0	1	$8140	Set CSR Bit 08 (Note 3)	Automatic (single sample)
Timed Bursts	0	1	0	1	0	$8280	Timer zero	Reset or Change mode
Locally Triggered Burst	0	0	1	1	0	$8180	Set CSR Bit 08 (Note 3)	Automatic (single Scan)
Remotely Triggered Burst	1	0	0	1	0	$8480	EXT trigger	Automatic (single scan)
Gain Loading (Note 5)	0	0	0	1	1	$80C0	Select Mode (Note 4)	Reset or change mode

NOTES:
1. The indicated CSR code also establishes the following conditions:
   a. Self-test LED is OFF.Subtract $8000 to turn the LED ON.
   b. Data coding is binary.Add $2000 for two's complement coding.
   c. Data Ready Flag occurs at end-of-scan.Add $0400 for a midscan flag.
   d. Random access channel is 00.Add the channel HEX code for any other channel, e.g.: $001A for channel 26.
2. Continuous Scanning is the default mode after a reset operation.
3. CSR Bit 08 clears automatically after sequence initiation.
4. Input sampling and conversion are disabled in the gain loading mode.
5. Automatic channel gain is initialized to unity (x1) at reset, and is specified with a gain code as:

Gain Code	Channel Gain
$00	x1
$01	x10
$02	x100
$03	Invalid Code

Artisan Technology Group - Quality Instrumentation ... Guaranteed | (888) 88-SOURCE | www.artisantg.com

Single Channel Random Access

In this mode, the digitized channel value is read from the Converter Data Register (CDR) at board address $0080. Each input channel is accessed individually by loading the channel number into CSR control Bits 00 through 05, and by setting the Start Sequence bit (CSR Bit 08). The Start Sequence bit clears automatically when the sample is initiated, and the Data Ready flag (CSR Bit 12) is set when the digitized value is available in the CDR.

Timed Burst

Timed burst data is acquired in a single data scan, or burst, of all buffer locations when the interval timer times out. A single burst can be acquired at the end of the programmed interval, or the process can be repetitive. In the repetitive mode, a burst is acquired at the end of each interval until either a different mode is selected, or the interval timer is disabled by clearing CSR Bit 09. Timer control is described in *Timer/ Counter Control* on page 68.

Locally Triggered Burst

An acquisition burst, or data scan, is produced each time the Start Sequence bit (CSR Bit 08) is set. The Start sequence bit clears automatically when the burst is initiated.

Remotely Triggered Burst

This mode is similar to the **locally triggered burst** mode, except that the burst is initiated by a HIGH to LOW transition on the EXT STRT L input at the P2 connector.

Synchronizing Multiple VMIVME-3128 Boards

Multiple VMIVME-3128 boards can be synchronized together by connecting the TRIG OUT L output from P2 of a synchronizing "master" to the EXT STRT L input of all slave boards. As many as 16 boards in a single chassis can be synchronized in this manner, thereby providing up to 1,024 synchronized input channels and the simultaneous sampling of like numbered channels on all boards.

Gain Loading

If the **automatic gain** mode has been jumper-selected (*Operating Modes* on page 64), the gain codes for channels with gains other than unity (x1) must be loaded into board memory after each reset operation. Gain loading is performed by first selecting the **gain loading** mode, and by then loading the gain code for each channel into the gain buffer, as listed in Table 3-6 on page 64. Selection of the **gain loading** mode replaces the first word of the data buffer with the ***gain buffer*** register. A gain code for each channel is loaded into the Gain Buffer Register, by selecting the channel in the CSR.

The address for each gain value is loaded into the CSR as the input address INPA0H to INPA5H (Bits 00 through 05). After all gain codes have been initialized, the **scanning** mode can be selected and the gain for each channel will be adjusted automatically.

The gain codes for all channels are initialized to "zero" (gain = x1) directly after a reset operation. The gain buffer should not be accessed during this initialization interval. The Data Ready flag is set when initialization is complete and the board may be accessed normally.

Artisan Technology Group - Quality Instrumentation ... Guaranteed | (888) 88-SOURCE | www.artisantg.com

Scan Monitoring

Data Ready Flag and Interrupt

CSR Bit 12 is the Data Ready flag, and is set to "one" at the end of a scan if CSR Bit 11 is "zero," or at the middle of a scan if CSR Bit 11 is "one." The data ready flag clears automatically when any buffer location is accessed from the VMEbus.

If the interrupt is enabled and the BCR control bit D06 (Table 3-3 on page 61) is "zero," an interrupt will be generated when the Data Ready flag is set.

Data Counter and Interrupt

The Data Counter Register (DCR) can be programmed to provide a data word count directly, or to generate an interrupt when a specific number of A/D conversions have occurred. Control of the DCR is described in *Timer/Counter Control* on page 68.

Artisan Technology Group - Quality Instrumentation ... Guaranteed | (888) 88-SOURCE | www.artisantg.com

Bus Interrupter

An interrupt can be generated when the data buffer is filled or half-filled, or after a specific number of A / D conversions have been completed (*Scan Monitoring* on page 66). The interrupt response is established through the Interrupt Control and Interrupt Vector registers which are shown in Figure 3-1 below. During board reset or system reset operations, the Interrupt Control register is cleared to "$00" and the Interrupt Vector register is preset to "$0F."

Interrupt Control Register

The Interrupt Control register controls the interrupt level, as well as enabling or disabling the interrupt. The function of each control bit is described in Table 3-7 on page 68.

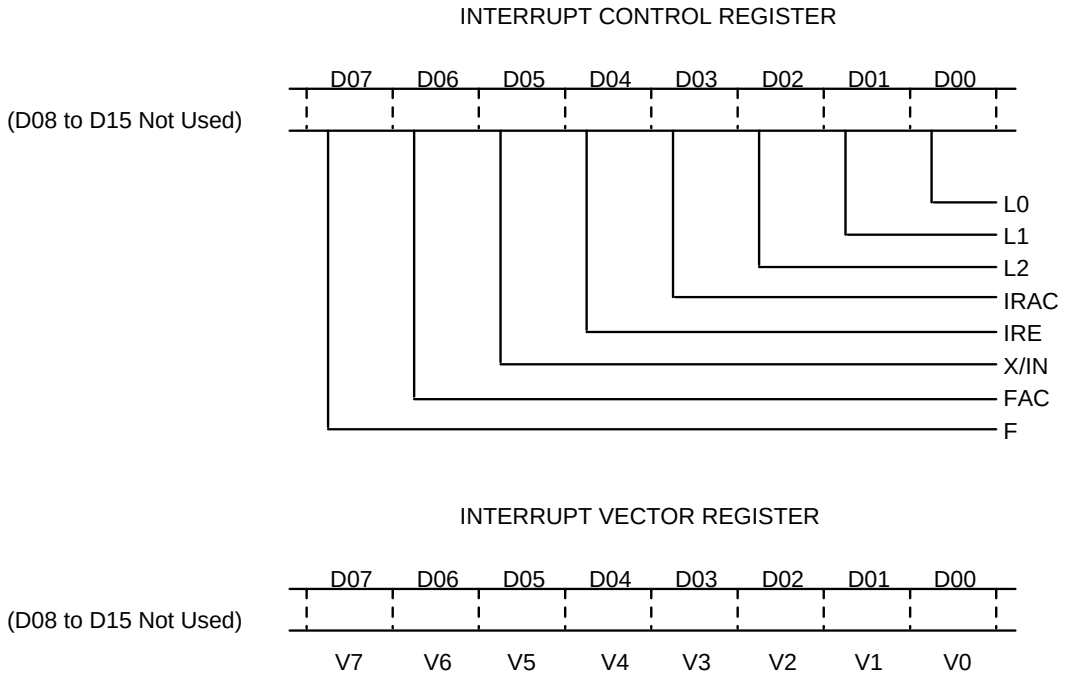

Figure 3-1 Interrupt Registers Organization

Interrupt Vector Register

Contents of the Interrupt Vector register are supplied as a data byte (Bits 07 through 00) on the data bus during the board's **interrupt acknowledge cycle**. The function of the vector is determined by the system user.

Artisan Technology Group - Quality Instrumentation ... Guaranteed | (888) 88-SOURCE | www.artisantg.com

Timer/Counter Control

General Characteristics

Interval timing and data counting capabilities are provided by a triple 16-bit programmable timer/counter which is controlled by the Timer/Counter Registers at board addresses $0020 to $0026 (Table 3-1 on page 57). Interval Timer Register TR0 is driven by an 8 MHz clock, and TMR1 is driven by the output of TMR0.

The Data Counter Register (DCR) operates independently of the two timers, and is used to monitor the progress of data through the buffer. Operating modes and data transfers for all three counters are controlled by the Timer/Counter Register (TCR).

INTERRUPT LEVEL (L2, L1, L0, Bits 02, 01 and 00):

Determines the level at which an interrupt will occur:

Table 3-7 Interrupt Control Register Functions

Register Bit			
L2	**L1**	**L0**	**IRQ Level**
0	0	0	Disabled
0	0	1	IRQ1
0	1	0	IRQ2
0	1	1	IRQ3
1	0	0	IRQ4
1	0	1	IRQ5
1	1	0	IRQ6
1	1	1	IRQ7

INTERRUPT ENABLE (IRE, Bit 04): When this bit is set HIGH, the bus interrupt is enabled; the interrupt is disabled if IRE is LOW.

INTERRUPT AUTO-CLEAR (IRAC, Bit 03): If the IRAC bit is set HIGH, the interrupt enable bit (IRE) is cleared during the interrupt acknowledge cycle which responds to the request. The IRE bit must then be set HIGH again to enable the interrupt.

EXTERNAL/INTERNAL (X/IN, Bit 05): This control bit has no valid function on the VMIVME-3128 board, and *MUST* be cleared LOW at all times.

FLAG (F, Bit 07): This control bit has no affect on the operation of the VMIVME-3128 board, and is available for use by the controlling processor as a utility flag.

FLAG AUTO-CLEAR (FAC, Bit 06): If "FAC" is set HIGH, the flag bit "F" is automatically cleared during an interrupt acknowledge cycle.

All timer/counter data transfers are eight bits wide and use data Bits 00 through 07. Two data transfers are required to read or write each 16-bit counter, with the least significant byte transferred first and the most significant byte transferred second. The control word determines the type of transfer, and must be written to the timer/counter before each data transfer. Table 3-8 on page 70 lists the data transfer sequences for the timers and counter.

Artisan Technology Group - Quality Instrumentation ... Guaranteed | (888) 88-SOURCE | www.artisantg.com

Scan Interval Timer

By operating in the "timed burst mode," the data buffer can be scanned (filled) repetitively at specific intervals, or a single scan can be initiated after the first interval. The **timed burst** mode is selected as follows:

- Operating Mode 2 CSR Bit 07 = 1, CSR Bit 06 = 0
- Interval Timer enabled CSR Bit 09 = 1

When operating in this mode, a buffer scan will occur at the end of the time interval programmed into the timer.

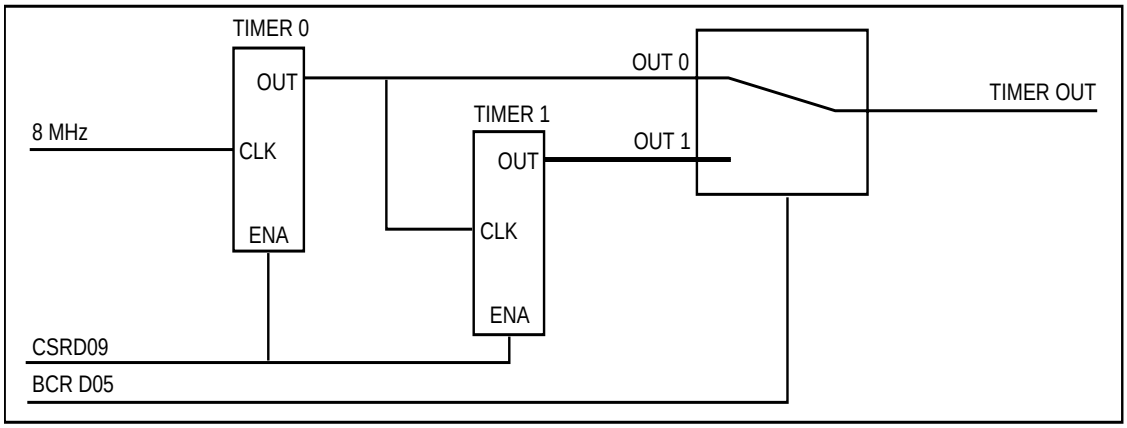

Figure 3-2 VMIVME-3128 Timer Functional Block Diagram

If BCR Bit 05 is cleared, Timer 0's output is selected as the timer's output and the product of the timer's output will be:

Formula for 16-bit Timer: Time / .125 = T0

If BCR Bit 05 is set, then Timer 1's output is selected as the timer's output and the output of Timer 0 is used as the clock for Timer 1. The period of the timer's output will be:

Formula for 2 Cascaded 16-bit Timers: Time / .125 = T1 X T0
Where: Time = Period of Timer out in µs up to 536.8454 s.
T0 = Timer 0's 16-bit value in decimal (1 to 6535).
T1 = Timer 1's 16-bit value in decimal (1 to 65535).

See Figure 3-2 above for a functional block diagram of the interval timer circuitry.

Artisan Technology Group - Quality Instrumentation ... Guaranteed | (888) 88-SOURCE | www.artisantg.com

Table 3-8 Timer/Counter Data Transfer Sequences

Operation	Load Sequence	Register Address	Register Name	Transferred Data, Bits 00-07 (Note 2)	XFR Mode
Load Timer 0	1	$26	Control Word	$34 (Select Timer)	Write
	2	$20	TMR 0 LS Byte	Least Significant Byte	Write
	3	$20	TMR 0 MS Byte	Most Significant Byte	Write
Load Timer 1 (Note 1)	1	$26	Control Word	$74 or $78 (Note 3)	Write
	2	$22	TMR 1 LS Byte	Least Significant Byte	Write
	3	$22	TMR 1 MS Byte	Most Significant Byte	Write
Load Data Counter	1	$26	Control Word	$B4	Write
	2	$24	CNTR LS Byte	Least Significant Byte	Write
	3	$24	CNTR MS Byte	Most Significant Byte	Write
Read Timer 0	1	$26	Control Word	$00 (Latch Timer Value)	Write
	2	$26	Control Word	$34 (Select Timer)	Write
	3	$20	TMR 0 LS Byte	Least Significant Byte	Read
	4	$20	TMR 0 MS Byte	Most Significant Byte	Read
Read Timer 1 (Note 1)	1	$26	Control Word	$40	Write
	2	$26	Control Word	$74 or $78 (Note 3)	Write
	3	$22	TMR 1 LS Byte	Least Significant Byte	Read
	4	$22	TMR 1 MS Byte	Most Significant Byte	Read
Read Data Counter	1	$26	Control Word	$80	Write
	2	$26	Control Word	$B4	Write
	3	$24	CNTR LS Byte	Least Significant Byte	Read
	4	$24	CNTR MS Byte	Most Significant Byte	Read

NOTES:

1. BCR control bit D05 must be set to "one" to include Timer 1 in the interval timer (see text). The 32-bit timer is configured as:

	Timer 1 (Bits 31 through 16)		Timer 0 (Bits 15 through 00)		
MSB	MS Byte	LS Byte	MS Byte	LS Byte	LSB

2. Timer values $0001 0000, $0001 0001, and $0001 are invalid.
3. A Timer 1 control word of $0074 will produce repetitive data bursts at the programmed interval. A control word of $0078 will limit the acquisition to a single data burst at the end of the first interval. The single burst can be repeated by reloading the timer 1 load sequence

Programmed timer intervals less than the time required to fill the buffer can cause unpredictable operation and should be avoided. The time, in microseconds, required to fill a buffer is 17 times the buffer word size. For example, a 64-word buffer fills in 1,088 µs.

Artisan Technology Group - Quality Instrumentation ... Guaranteed | (888) 88-SOURCE | www.artisantg.com

Data Counter Control

The data counter can generate an interrupt after a predetermined number of data words have been stored in the buffer. The counter can be read directly to monitor the data count. To use the counter to generate an interrupt:

1. Load the data counter with the required data count (Table 3-8 on page 70).
2. Set the source control Bit 06 in the BCR (Table 3-6 on page 64) to "one." (This disables the midscan / endscan interrupt.)
3. Enable the interrupt as described in *Bus Interrupter* on page 67.
4. Initiate the scanning operation.

Table 3-8 on page 70 shows the sequence required for reading the data counter directly. The data counter can be accessed at any time, regardless of which operating mode is selected. Because the counter counts down, the value read is the ***remaining*** data count.

Artisan Technology Group - Quality Instrumentation ... Guaranteed | (888) 88-SOURCE | www.artisantg.com

Typical Programming Examples

The following examples of VMIVME-3128 programming illustrate typical applications for various operating modes.

We assume the following conditions:

- Type 68010 or later system processor
- Automatic gain
- Short I/O location $FBFF 0000
- Offset binary data coding

Example C Header File

```
/*-----------------------------------------------------------------------------*/
/* 3128.H 3128 HEADER FILE                                                     */
/*-----------------------------------------------------------------------------*/

/*  DEFINE  Bytes, Words, AND Longs  FROM C DATA SIZES.                         */

typedef unsigned char  Byte;        /* BYTES ARE UNSIGNED CHAR'S               */
typedef unsigned short Word;        /* WORDS ARE UNSIGNED SHORT'S              */
typedef unsigned int   Long;        /* LONGS ARE UNSIGNED INT'S                */
typedef struct v3128_reg Reg3128;   /* 3128 register type                      */
typedef struct v3128_buf Buf3128;   /* 3128 ram buff type                      */


struct v3128_reg
{
Word reg3128[20];           /* 3128 REGISTERS ARE AN ARRAY OF 20 WORDS      */
};


struct v3128_buf
{
Word  adc3128[1024];        /* 3128 ADC MEMORY IS AN ARRAY OF 1024 WORDS    */
};


/*  REGISTER OFFSET (ARRAY) DEFINITIONS                                         */

#define   BID           00          /* BOARD ID REGISTER (1 word)              */
#define   CSR           01          /* CONTROL AND STATUS REGISTER             */
#define   BCR           02          /* BUFFER CONTROL REGISTER                 */
#define   ICR           08          /* INTERRUPT CONTROL REGISTER              */
#define   IVR           12          /* INTERRUPT VECTOR  REGISTER              */
#define   TR0           16          /* INTERVAL TIMER REGISTER 0               */
#define   TR1           17          /* INTERVAL TIMER REGISTER 1               */
#define   DCR           18          /* DATA COUNTER REGISTER                   */
#define   TCR           19          /* TIMER/COUNTER CONTROL REGISTER          */

/*-----------------------------------------------------------------------------*/
```


Artisan Technology Group - Quality Instrumentation ... Guaranteed | (888) 88-SOURCE | www.artisantg.com

Example C Program

```
/*-----------------------------------------------------------------------------*/
/*  EXAMPLE C ROUTINES FOR THE VMIVME-3128 64-CHANNEL ANALOG INPUT BOARD      */
/*-----------------------------------------------------------------------------*/
/*-----------------------------------------------------------------------------*/
/*  INCLUDE NEEDED SUPPORT CODE                                               */
/*-----------------------------------------------------------------------------*/
#include  <stdio.h>                /* STANDARD I/O HEADER FILE               */
#include  "3128.h"                 /* VMIVME-3128 HEADER FILE                */

/*-----------------------------------------------------------------------------*/
/*  SETUP MEMORY POINTERS AND STORAGE                                         */
/*-----------------------------------------------------------------------------*/

void init_gain( Reg3128 *board, Buf3128 *buffer, Word gain ) ;
void set_gain( Reg3128 *board, Buf3128 *buffer, Word channel, Word gain ) ;
void auto_scan( Reg3128 *board, Buf3128 *buffer, Word num_of_scans ) ;
void timed_scan( Reg3128 *board, Buf3128 *buffer, Word num_of_scans ) ;
void local_burst( Reg3128 *board, Buf3128 *buffer ) ;
void remote_burst( Reg3128 *board, Buf3128 *buffer, Word num_of_scans ) ;

struct
{
Word storage[1024] ;
} memory ;

Word  loop, oldcsr, gain, channel, num_of_scans, num_done;

main()
{
Reg3128 * brd_base = ((Reg3128 *) 0xFBFF0000) ;
Buf3128 * buf_base = ((Buf3128 *) 0xFBFF0080) ;

gain = 0x0001;              /* GAIN SET EQUAL TO X10                        */
channel = 0x0005;           /* CHANNEL SELECTED IS CHANNEL 5                */
num_of_scans = 0x0100;      /* NUMBER OF SCANS IS EQUAL TO 100 HEX BUFFERS  */

init_gain( brd_base, buf_base, gain ) ;
set_gain( brd_base, buf_base, channel, gain ) ;
auto_scan( brd_base, buf_base, num_of_scans ) ;
timed_scan( brd_base, buf_base, num_of_scans ) ;
locally_burst( brd_base, buf_base ) ;
remote_burst( brd_base, buf_base, num_of_scans ) ;
}

/*-----------------------------------------------------------------------------*/

void init_gain( Reg3128 *board, Buf3128 *buffer, Word gain )
{
oldcsr = board->reg3128[CSR] ;
for( loop = 0x0000; loop < 0x0040; loop++ )
{
board->reg3128[CSR] = (0x80c0 + loop) ;  /* 80C0 = GAINLOAD MODE          */
buffer->adc3128[00] = gain ;
```


Artisan Technology Group - Quality Instrumentation ... Guaranteed | (888) 88-SOURCE | www.artisantg.com

```
}
board->reg3128[CSR] = oldcsr ;
}

/*-----------------------------------------------------------------------------*/

void set_gain( Reg3128 *board, Buf3128 *buffer, Word channel, Word gain )
{
oldcsr = board->reg3128[CSR] ;
board->reg3128[CSR] = (0x80c0 + channel) ;  /* 80C0 = GAINLOAD MODE       */
buffer->adc3128[00] = gain ;
board->reg3128[CSR] = oldcsr ;
}

/*-----------------------------------------------------------------------------*/

void auto_scan( Reg3128 *board, Buf3118 *buffer, Word num_of_scans )
{
oldcsr = board->reg3128[CSR] ;
num_done = 0x0000 ;
board->reg3128[BCR] = 0x001C ; /* 64 CHANNELS, 1024 WORDS                    */
board->reg3128[CSR] = 0x8800 ; /* AUTO SCAN, MIDSCAN ENABLED                 */
do
{
if( board->reg3128[CSR] = = 0x9800 ) /* CHECK FOR DATA READY FLAG         */
{
for( loop = 0x0000; loop < 0x0400; loop ++ )
{
memory.storage[ loop ] = buffer->adc3128[ loop ] ;
}
num_done++ ;
}
} while ( num_done < num_of_scans ) ;
board->reg3128[CSR] = oldcsr ;
}

/*-----------------------------------------------------------------------------*/

void timed_scan( Reg3128 *board, Buf3128 *buffer, Word num_of_scans )
{
oldcsr = board->reg3128[CSR] ;
num_done = 0x0000 ;

board->reg3128[TCR] = 0x0034 ;  /* SELECT TIMER 0                            */
board->reg3128[TR0] = 0x00E8 ;  /* WRITE TR0 LSB                             */
board->reg3128[TR0] = 0x0003 ;  /* WRITE TR0 MSB                             */
board->reg3128[TCR] = 0x0074 ;  /* SELECT TIMER 1                            */
board->reg3128[TR1] = 0x0040 ;  /* WRITE TR1 LSB                             */
board->reg3128[TR1] = 0x001F ;  /* WRITE TR1 MSB                             */
board->reg3128[BCR] = 0x003C ;  /* 64 CHANNELS, 1024 WORDS, TR1 ENABLED      */
board->reg3128[CSR] = 0x8280 ;  /* TIMER ENABLED, SINGLE SCAN                */

do
{
if( board->reg3128[CSR] = = 0x9280 ) /* CHECK FOR NEW DATA READY FLAG      */
{
for( loop = 0x0000; loop < 0x0400; loop ++ )
```


Artisan Technology Group - Quality Instrumentation ... Guaranteed | (888) 88-SOURCE | www.artisantg.com

```
{
memory.storage[ loop ] = buffer->adc3128[ loop ] ;
}
num_done++ ;
}
} while ( num_done < num_of_scans ) ;
board->reg3128[CSR] = oldcsr ;
}

/*-----------------------------------------------------------------------*/

void local_burst( Reg3128 *board, Buf3128 *buffer )
{
oldcsr = board->reg3128[CSR] ; /* STORE CSR FOR FUTURE USE                 */
board->reg3128[BCR] = 0x001C ; /* 64 CHANNELS, 1024 WORDS                  */
board->reg3128[CSR] = 0x8080 ; /* SINGLE SCAN                              */
board->reg3128[CSR] = 0x8180 ; /* TRIGGER BURST                            */
for( loop = 0x0000; loop < 0x0400; loop ++ )
{
memory.storage[ loop ] = buffer->adc3128[ loop ] ;
num_done++ ;
}
board->reg3128[CSR] = oldcsr ;
}
/*-----------------------------------------------------------------------*/
void remote_burst( Reg3128 *board, Buf3128 *buffer, Word num_of_scans )
{
oldcsr = board->reg3128[CSR] ;
num_done = 0x0000 ;
board->reg3128[BCR] = 0x001C ; /* 64 CHANNELS, 1024 WORDS                  */
board->reg3128[CSR] = 0x8480 ; /* WAIT REMOTE TRIGGER                      */
do
{
if( board->reg3128[CSR] = = 0x9480 )
{
for( loop = 0x0000; loop < 0x0400; loop ++ )
{
memory.storage[ loop ] = buffer->adc3128[ loop ] ;
}
num_done++ ;
}
} while ( num_done < num_of_scans ) ;
board->reg3128[CSR] = oldcsr ;
}

/*-----------------------------------------------------------------------*/
```


Artisan Technology Group - Quality Instrumentation ... Guaranteed | (888) 88-SOURCE | www.artisantg.com

Artisan Technology Group - Quality Instrumentation ... Guaranteed | (888) 88-SOURCE | www.artisantg.com

Maintenance

Maintenance

This section provides information relative to the care and maintenance of VMIC's products. If the product malfunctions, verify the following:

- System power
- Software
- System configuration
- Electrical connections
- Jumper or configuration options
- Boards are fully inserted into their proper connector location
- Connector pins are clean and free from contamination
- No components of adjacent boards are disturbed when inserting or removing the board from the chassis
- Quality of cables and I/O connections

If products must be returned, contact VMIC for a Return Material Authorization (RMA) Number. **This RMA Number must be obtained prior to any return**.

Contact VMIC Customer Care at 1-800-240-7782, or
E-mail: customer.service@vmic.com

Artisan Technology Group - Quality Instrumentation ... Guaranteed | (888) 88-SOURCE | www.artisantg.com

Maintenance Prints

User level repairs are not recommended. The drawings and tables in this manual are for reference purposes only.

Artisan Technology Group - Quality Instrumentation ... Guaranteed | (888) 88-SOURCE | www.artisantg.com

Artisan Technology Group

Artisan Technology Group is your source for quality new and certified-used/pre-owned equipment

- FAST SHIPPING AND DELIVERY
- TENS OF THOUSANDS OF IN-STOCK ITEMS
- EQUIPMENT DEMOS
- HUNDREDS OF MANUFACTURERS SUPPORTED
- LEASING/MONTHLY RENTALS
- ITAR CERTIFIED SECURE ASSET SOLUTIONS

SERVICE CENTER REPAIRS
Experienced engineers and technicians on staff at our full-service, in-house repair center

InstraView℠ REMOTE INSPECTION
Remotely inspect equipment before purchasing with our interactive website at ***www.instraview.com*** ↗

WE BUY USED EQUIPMENT
Sell your excess, underutilized, and idle used equipment
We also offer credit for buy-backs and trade-ins
www.artisantg.com/WeBuyEquipment ↗

LOOKING FOR MORE INFORMATION?
Visit us on the web at ***www.artisantg.com*** ↗ for more information on price quotations, drivers, technical specifications, manuals, and documentation

Contact us: (888) 88-SOURCE | sales@artisantg.com | www.artisantg.com