Artisan Technology Group

Artisan Technology Group is your source for quality new and certified-used/pre-owned equipment

- FAST SHIPPING AND DELIVERY
- TENS OF THOUSANDS OF IN-STOCK ITEMS
- EQUIPMENT DEMOS
- HUNDREDS OF MANUFACTURERS SUPPORTED
- LEASING/MONTHLY RENTALS
- ITAR CERTIFIED SECURE ASSET SOLUTIONS

SERVICE CENTER REPAIRS
Experienced engineers and technicians on staff at our full-service, in-house repair center

InstraView℠ REMOTE INSPECTION
Remotely inspect equipment before purchasing with our interactive website at ***www.instraview.com*** ↗

WE BUY USED EQUIPMENT
Sell your excess, underutilized, and idle used equipment
We also offer credit for buy-backs and trade-ins
www.artisantg.com/WeBuyEquipment ↗

LOOKING FOR MORE INFORMATION?
Visit us on the web at ***www.artisantg.com*** ↗ for more information on price quotations, drivers, technical specifications, manuals, and documentation

Contact us: (888) 88-SOURCE | sales@artisantg.com | www.artisantg.com

OPERATIONS MANUAL
PPM-FPVGA

NOTE: *This manual has been designed and created for use as part of the WinSystems' Technical Manuals CD and/or the WinSystems' website. If this manual or any portion of the manual is downloaded, copied or emailed, the links to additional information (i.e. software, cable drawings) will be inoperable.*

WinSystems reserves the right to make changes in the circuitry
and specifications at any time without notice.
©Copyright 2001 by WinSystems. All Rights Reserved.

Artisan Technology Group - Quality Instrumentation ... Guaranteed | (888) 88-SOURCE | www.artisantg.com

REVISION HISTORY
P/N 403-0295-000

ECO Number	Date Code	Rev Level
ORIGINATED	010809	D

Artisan Technology Group - Quality Instrumentation ... Guaranteed | (888) 88-SOURCE | www.artisantg.com

TABLE OF CONTENTS

Section	Paragraph Title	Page
	Visual Index- Quick Reference	i
1	General Information	1-1
1.1	Features	1-1
1.2	General Description	1-1
1.3	Specifications	1-4
2	PPM-FPVGA Technical Reference	2-1
2.1	Introduction	2-1
2.2	Panel Backlight Enable	2-2
2.3	Panel Backlight Connection	2-2
2.4	CRT Output Connection	2-3
2.5	Video Mode Table	2-3
2.6	Flat Panel Output Connectors	2-4
2.7	PC/104 Pin Definitions	2-5
2.8	PC/104-*Plus* Pin Definitions	2-6
2.9	Slot Selection	2-7
2.10	Jumper Connector Summary	2-7

APPENDIX Cable Drawings and Software Drivers and Examples

Warranty and Repair Information

Artisan Technology Group - Quality Instrumentation ... Guaranteed | (888) 88-SOURCE | www.artisantg.com

Visual Index – Quick Reference

For the convenience of the user, a copy of the Visual Index has been provided with direct links to connector and jumper configuration data.

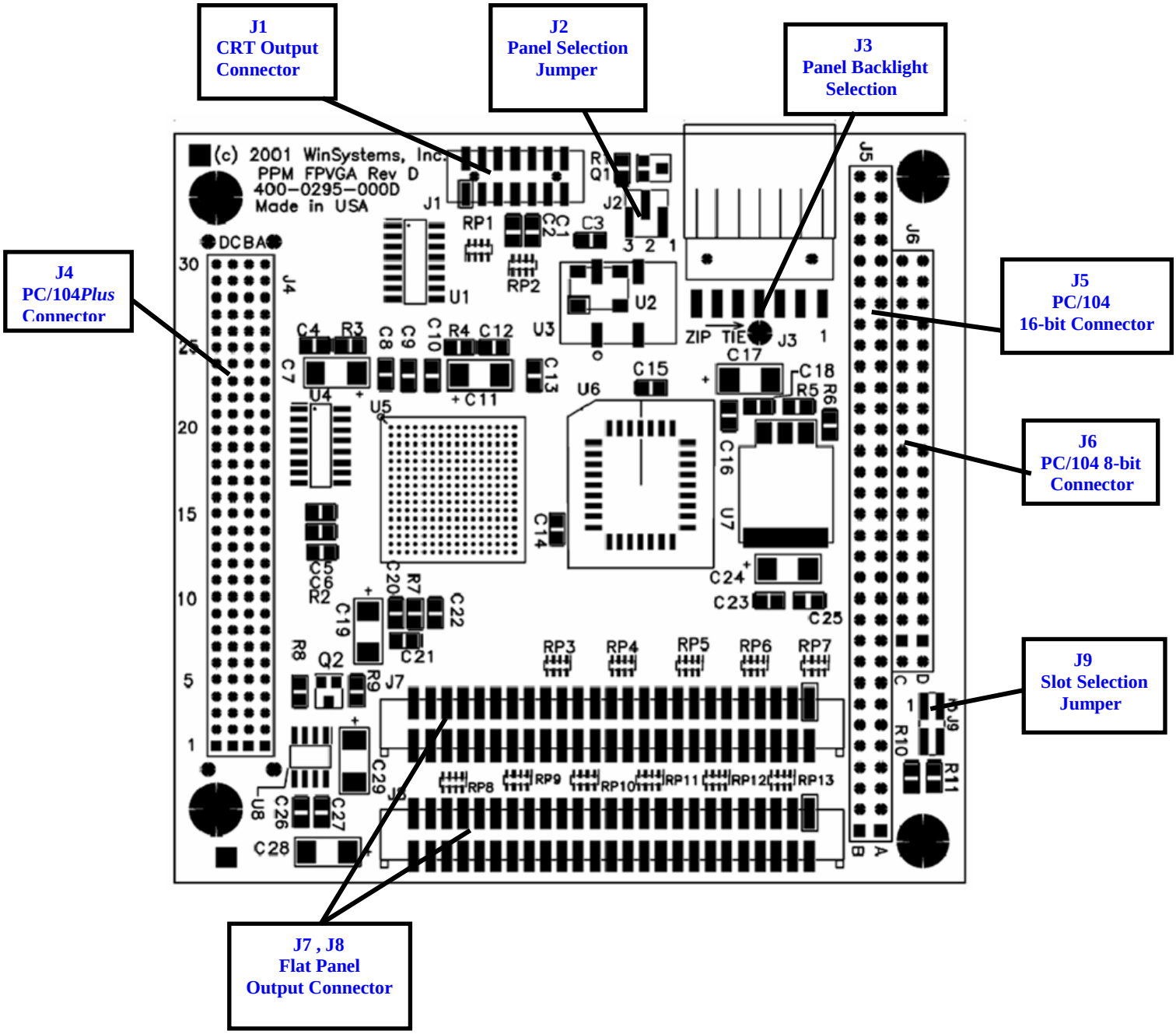

Artisan Technology Group - Quality Instrumentation ... Guaranteed | (888) 88-SOURCE | www.artisantg.com

1 General Information

1.1 Features

- High-resolution CRT and flat panel controller with hardware Windows accelerator
- Integrated high-performance SDRAM memory
- Supports simultaneous CRT and LCD operation
- Flexible panel support with up to 36-bit interfacing for monochrome and color panels
- Power sequencing to control the bias voltage and backlight inverter for panels
- CRT support with triple 8-bit RAMDAC
- Hardware and BIOS compatible with VGA standards
- Onboard EPROM with video BIOS
- PC/104-Plus bus interface with Burst mode capability
- Single +5V supply
- Operates from -40 to +85°C

1.2 General Description

The PPM-FPVGA is a PC/104-Plus compliant flat panel and CRT video controller. It is based upon the Asiliant 69000 HiQVideo controller that is supported by a wide range of operating systems including Windows 98, Windows NT, Windows CE, VxWorks, DOS, and Linux. The PPM-FPVGA module is designed to offer high-performance video capability. It supports 32-bits of addressing data, as well as the complete control interface that will operate at 33Mhz.

Artisan Technology Group - Quality Instrumentation ... Guaranteed | (888) 88-SOURCE | www.artisantg.com

1.3 Specifications

1.3.1 Electrical

Bus interface : 32-bit PC/104-Plus PCI Bus

VCC : +5V +-5% @ 270mA typical

1.3.2 Mechanical

Dimensions : 3.6" X 3.8" X 0.6"

PC Board : FR4 Epoxy Glass with 2 signal layers and 2 power planes with screened component legend and plated through holes.

Jumpers : 0.025" square posts on 0.79" centers

CRT Interface : 14-pin, 2mm Molex type 87331-1420

Panel Interface : Two 50-pin 2mm Molex type 87331-5020

1.3.3 Environmental

Operating Temperature : -40° to +85° C

Non-Condensing relative humidity : 5% to 95%

Artisan Technology Group - Quality Instrumentation ... Guaranteed | (888) 88-SOURCE | www.artisantg.com

2 PPM-FPVGA TECHNICAL REFERENCE

2.1 Introduction

The PPM-FPVGA is a fully IBM VGA compatible display module capable of CRT or Flat Panel output. Optional FPA (Flat Panel Adapter) modules allow for easy interface to a variety of color and monochrome Flat Panel displays. Details regarding interfacing to specific Flat Panels is not provided in this manual but should be referenced in the documentation accompanying the FPA module. Attempted connection to any flat panel not directly supported by a WinSystems FPA module is at the user's risk and extreme care should be exercised to avoid damaging or destroying the panel. To request assistance with the PPM-FPVGA or the WinSystems FPA modules contact the Technical Support Group at (817) 274-7553 between 8AM and 5PM Central Time.

HAZARD WARNING: LCD panels can require a high voltage for the panel backlight. This high-frequency voltage can exceed 1000 volts and can present a shock hazard. Care should be taken when wiring or handling the inverter output. To avoid danger of shock and to avoid damaging fragile and expensive panels, make all connection changes with the power removed.

Artisan Technology Group - Quality Instrumentation ... Guaranteed | (888) 88-SOURCE | www.artisantg.com

2.2 Panel Backlight Enable

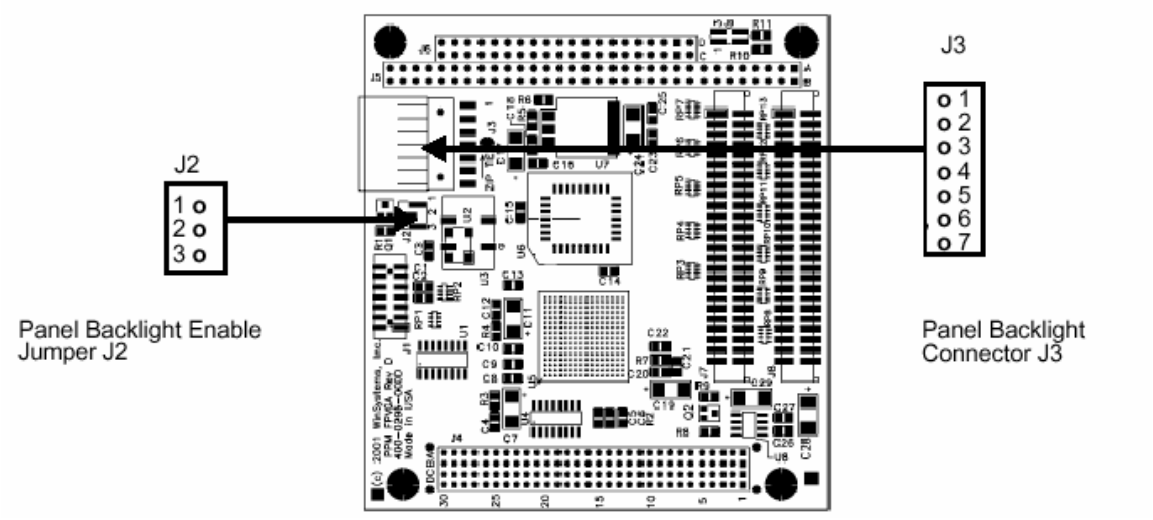

The Panel backlight enable jumper is located at J2. J2 must be jumpered 1-2 for Sharp type panels, and 2-3 for NEC type panels. An example jumpering for NEC type panels is shown below.

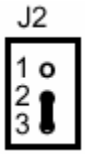

Panel Backlight Enable Jumper J2

2.3 Panel Backlight Connection

Panel backlight connection is made via the connector at J3. Pinout for J3 is shown here for reference.

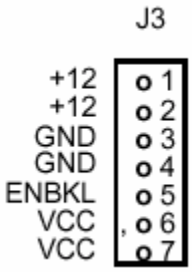

Artisan Technology Group - Quality Instrumentation ... Guaranteed | (888) 88-SOURCE | www.artisantg.com

2.4 CRT Output Connection

Video output to a standard VGA monitor is made via the connector at J1. An adapter

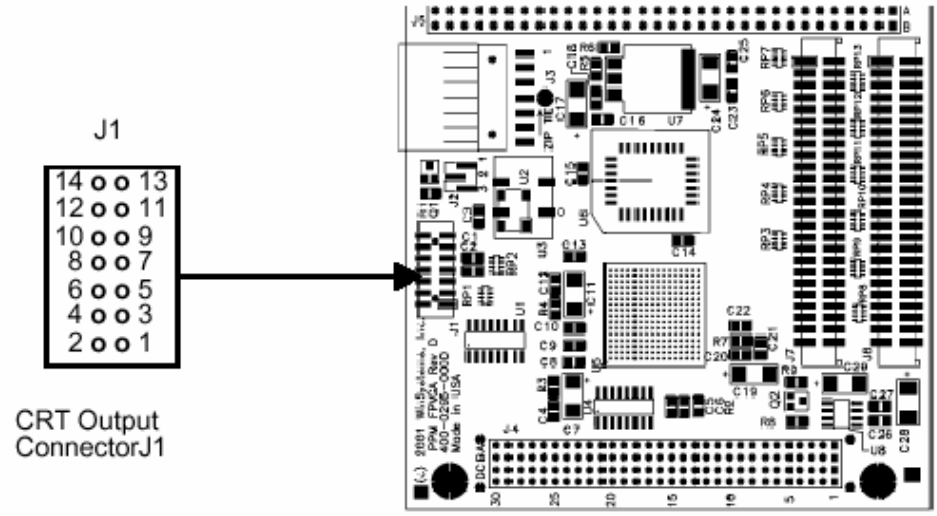

cable, part number CBL-234-1 is available from WinSystems to adapt J1 to a standard DB15 VGA connector. Pinout for J1 is shown here.

J1

VCC	14 o o 13	DDCCLK
GND	12 o o 11	DDCDATA
GND	10 o o 9	VSYNC
GND	8 o o 7	HSYNC
GND	6 o o 5	BLUE
GND	4 o o 3	GREEN
GND	2 o o 1	RED

2.5 Video Mode Table

The PPM-FPVGA video section supports a number of standard and extended video modes. The following table extracted from the Asiliant 6900 databook shows the video modes supported.

Resolution	Coler Depth (bpp)	Refresh Rates
640 x 480	8	60, 75, 85
640 x 480	16	60, 75, 85
640 x 480	24	60, 75, 85
800 x 600	8	60, 75, 85
800 x 600	16	60, 75, 85
800 x 600	24	60, 75, 85
1024 x 768	8	60, 75, 85
1024 x 768	16	60, 75, 85
1280 x 1024	8	60

Artisan Technology Group - Quality Instrumentation ... Guaranteed | (888) 88-SOURCE | www.artisantg.com

2.6 Flat Panel Output Connectors

Connection to all flat panels is made via the two 50-pin connectors at J7 and J8. These connectors are cabled to the appropriate FPA (Flat Panel Adapter) module which then breaks out to the necessary cabling for attachment to the panel itself. The FPA module also supplies any special controls that may be needed for the panel. Refer to the FPA documentation for specific hook-up instructions. The pin definitions for J7 and J8 are shown here for reference :

J7

SW0	1	o	o	2	SW1
SW2	3	o	o	4	SW3
FPO	5	o	o	6	GND
FP1	7	o	o	8	GND
FP2	9	o	o	10	GND
FP3	11	o	o	12	GND
FP4	13	o	o	14	GND
FP5	15	o	o	16	GND
FP6	17	o	o	18	GND
FP7	19	o	o	20	GND
FP8	21	o	o	22	GND
FP9	23	o	o	24	GND
FP10	25	o	o	26	GND
FP11	27	o	o	28	GND
PCSHCLK	29	o	o	30	GND
PCFLM	31	o	o	32	GND
PCLP	33	o	o	34	GND
PCM	35	o	o	36	GND
PHSYNC	37	o	o	38	GND
PVSYNC	39	o	o	40	GND
ENVCC	41	o	o	42	GND
ENBKL	43	o	o	44	GND
ENVEE	45	o	o	46	-12V
+12V	47	o	o	48	+12V
SWVCC	49	o	o	50	SWVCC

J8

FP12	1	o	o	2	GND
FP13	3	o	o	4	GND
FP14	5	o	o	6	GND
FP15	7	o	o	8	GND
FP16	9	o	o	10	GND
FP17	11	o	o	12	GND
FP18	13	o	o	14	GND
FP19	15	o	o	16	GND
FP20	17	o	o	18	GND
FP21	19	o	o	20	GND
FP22	21	o	o	22	GND
FP23	23	o	o	24	GND
FP24	25	o	o	26	GND
FP25	27	o	o	28	GND
FP26	29	o	o	30	GND
FP27	31	o	o	32	GND
FP28	33	o	o	34	GND
FP29	35	o	o	36	GND
FP30	37	o	o	38	GND
FP31	39	o	o	40	GND
FP32	41	o	o	42	GND
FP33	43	o	o	44	GND
FP34	45	o	o	46	GND
FP35	47	o	o	48	GND
SWVCC	49	o	o	50	SWVCC

Artisan Technology Group - Quality Instrumentation ... Guaranteed | (888) 88-SOURCE | www.artisantg.com

2.7 PC\104 Pin Definitions

The PPM-FPVGA supports I/O expansion through the standard PC/104 connectors at J5 and J6. The PPM-FPVGA supports both 8-bit and 16-bit PC/104 modules. The PC/104 connector pin definitions are provided here for reference purposes.

J5

GND	B1	o o	A1	IOCHK
RESET	B2	o o	A2	BD7
+5V	B3	o o	A3	BD6
IRQ9	B4	o o	A4	BD5
-5V	B5	o o	A5	BD4
DRQ2	B6	o o	A6	BD3
-12V	B7	o o	A7	BD2
0WS	B8	o o	A8	BD1
+12V	B9	o o	A9	BD0
GND	B10	o o	A10	IOCHRDY
MEMW	B11	o o	A11	AEN
MEMR	B12	o o	A12	SA19
IOW	B13	o o	A13	SA18
IOR	B14	o o	A14	SA17
DACK3	B15	o o	A15	SA16
DRQ3	B16	o o	A16	SA15
DACK1	B17	o o	A17	SA14
DRQ1	B18	o o	A18	SA13
REFRESH	B19	o o	A19	SA12
SYSCLK	B20	o o	A20	SA11
IRQ7	B21	o o	A21	SA10
IRQ6	B22	o o	A22	SA9
IRQ5	B23	o o	A23	SA8
IRQ4	B24	o o	A24	SA7
IRQ3	B25	o o	A25	SA6
DACK2	B26	o o	A26	SA5
TC	B27	o o	A27	SA4
BALE	B28	o o	A28	SA3
+5V	B29	o o	A29	SA2
OSC	B30	o o	A30	SA1
GND	B31	o o	A31	SA0
GND	B32	o o	A32	GND

J6

GND	C0	o o	D0	GND
SBHE	C1	o o	D1	MEMCS16
LA23	C2	o o	D2	IOCS16
LA22	C3	o o	D3	IRQ10
LA21	C4	o o	D4	IRQ11
LA20	C5	o o	D5	IRQ12
LA19	C6	o o	D6	IRQ15
LA18	C7	o o	D7	IRQ14
LA17	C8	o o	D8	DACK0
MEMR	C9	o o	D9	DRQ0
MEMW	C10	o o	D10	DACK5
SD8	C11	o o	D11	DRQ5
SD9	C12	o o	D12	DACK6
SD10	C13	o o	D13	DRQ6
SD11	C14	o o	D14	DACK7
SD12	C15	o o	D15	DRQ7
SD13	C16	o o	D16	VCC
SD14	C17	o o	D17	MASTER
SD15	C18	o o	D18	GND
KEY	C19	o o	D19	GND

Artisan Technology Group - Quality Instrumentation ... Guaranteed | (888) 88-SOURCE | www.artisantg.com

2.8 PC/104-*Plus* Pin Definitions

J4 is the PC/104-Plus bus connector. The pin definitions for this connector are show here for reference:

Pin	A	B	C	D
1	GND	RESERVED	+5	AD00
2	VI/O	AD02	AD01	+5V
3	AD05	GND	AD04	AD03
4	C/BE0#	AD07	GND	AD06
5	GND	AD09	AD08	GND
6	AD11	VI/O	AD10	M66EN
7	AD14	AD13	GND	AD12
8	+3.3V	C/BE1#	AD15	+3.3V
9	SERR#	GND	RESERVED	PAR
10	GND	PERR#	+3.3V	RESERVED
11	STOP#	+3.3V	LOCK#	GND
12	+3.3V	TRDY#	GND	DEVSEL#
13	FRAME#	GND	IRDY#	+3.3V
14	GND	AD16	+3.3V	C/BE2#
15	AD18	+3.3V	AD17	GND
16	AD21	AD20	GND	AD19
17	+3.3V	AD23	AD22	+3.3V
18	IDSEL0	GND	IDSEL1	IDSEL2
19	AD24	C/BE3#	VI/O	IDSEL3
20	GND	AD26	AD25	GND
21	AD29	+5V	AD28	AD27
22	+5V	AD30	GND	AD31
23	REQ0#	GND	REQ1#	VI/O
24	GND	REQ2#	+5V	GNT0#
25	GNT1#	VI/O	GNT2#	GND
26	+5V	CLK0	GND	CLK1
27	CLK2	+5V	CLK3	GND
28	GND	INTD#	+5V	RST#
29	+12V	INTA#	INTB#	INTC#
30	-12V	REQ3#	GNT3#	GND

NOTE: 1. The shaded area denotes power or ground signals.

Artisan Technology Group - Quality Instrumentation ... Guaranteed | (888) 88-SOURCE | www.artisantg.com

2.9 Slot Selection

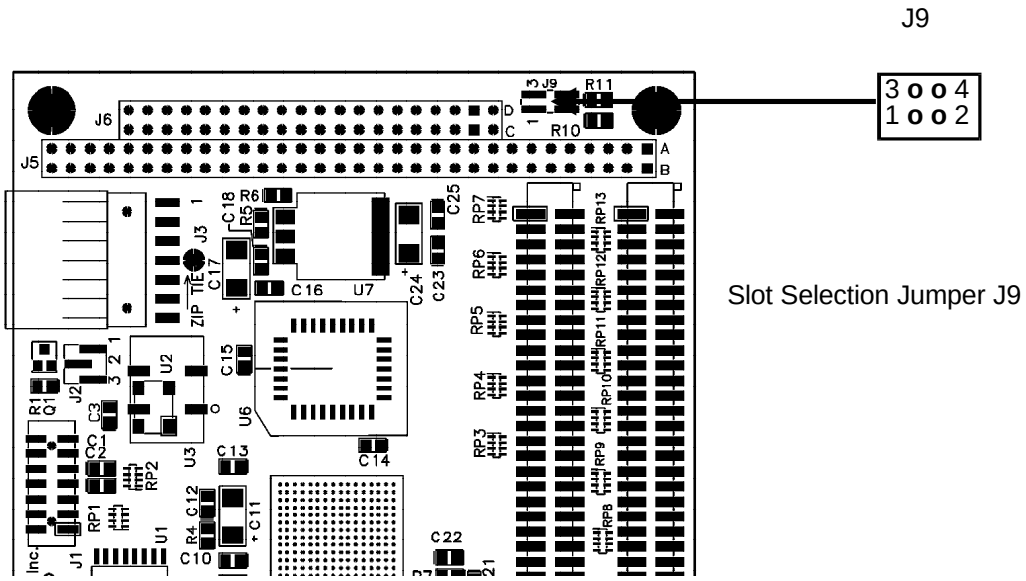

J9 is used to select the "slot" number of the PCI connection for the board. Each PC/104Plus board installed in a system must have a unique "slot" assigment and must not conflict with any PCI "slot" assignments on the CPU card. The jumperings for J5 are shown here :

2.10 Jumper Connector Summary

Jumper/ Connector	Description	Page Number
J1	CRT Output Connector	2-3
J2	Panel Select Jumper	2-2
J3	Panel Backlight Selection	2-2
J4	PC/104-Plus Connector	2-6
J5	PC/104 16-bit Connector	2-5
J6	PC/104 8-bit Connector	2-5
J7	Flat Panel Output Connector	2-4
J8	Flat Panel Output Connector	2-4
J9	Slot Selection Jumper	2-7

Artisan Technology Group - Quality Instrumentation ... Guaranteed | (888) 88-SOURCE | www.artisantg.com

APPENDIX C

Cable Drawings

CBL-234-1	CRT adapter cable to 15-pin D-Sub

Software Drivers and Examples

Driver for Windows XP	WXPv251c.zip
Driver for Windows 2000	W2Kv251c.zip
Driver for Windows NT 4.0	NT4v251c.zip
Driver for Windows 3.1	W31132.EXE
Driver for Windows 95	W95500.EXE
Driver for Windows 98	W98600.EXE
Driver for OS/2 3.0 & 4.0	OS2231.EXE

Telephone: 817-274-7553 . . Fax: 817-548-1358
http://www.winsystems.com . . E-mail: info@winsystems.com

WARRANTY

WinSystems warrants that for a period of two (2) years from the date of shipment any Products and Software purchased or licensed hereunder which have been developed or manufactured by WinSystems shall be free of any material defects and shall perform substantially in accordance with WinSystems' specifications therefore. With respect to any Products or Software purchased or licensed hereunder which have been developed or manufactured by others, WinSystems shall transfer and assign to Customer any warranty of such manufacturer or developer held by WinSystems, provided that the warranty, if any, may be assigned. The sole obligation of WinSystems for any breach of warranty contained herein shall be, at its option, either (i) to repair or replace at its expense any materially defective Products or Software, or (ii) to take back such Products and Software and refund the Customer the purchase price and any license fees paid for the same. Customer shall pay all freight, duty, broker's fees, insurance changes and other fees and charges for the return of any Products or Software to WinSystems under this warranty. WinSystems shall pay freight and insurance charges for any repaired or replaced Products or Software thereafter delivered to Customer within the United States. All fees and costs for shipment outside of the United States shall be paid by Customer. The foregoing warranty shall not apply to any Products or Software which have been subject to abuse, misuse, vandalism, accidents, alteration, neglect, unauthorized repair or improper installations.

THERE ARE NO WARRANTIES BY WINSYSTEMS EXCEPT AS STATED HEREIN. THERE ARE NO OTHER WARRANTIES EXPRESS OR IMPLIED INCLUDING, BUT NOT LIMITED TO, THE IMPLIED WARRANTIES OF MERCHANTABILITY AND FITNESS FOR A PARTICULAR PURPOSE, IN NO EVENT SHALL WINSYSTEMS BE LIABLE FOR CONSEQUENTIAL, INCIDENTAL, OR SPECIAL DAMAGES INCLUDING, BUT NOT LIMITED TO, DAMAGES FOR LOSS OF DATA, PROFITS OR GOODWILL. WINSYSTEMS' MAXIMUM LIABILITY FOR ANY BREACH OF THIS AGREEMENT OR OTHER CLAIM RELATED TO ANY PRODUCTS, SOFTWARE, OR THE SUBJECT MATTER HEREOF, SHALL NOT EXCEED THE PURCHASE PRICE OR LICENSE FEE PAID BY CUSTOMER TO WINSYSTEMS FOR THE PRODUCTS OR SOFTWARE OR PORTION THEREOF TO WHICH SUCH BREACH OR CLAIM PERTAINS.

WARRANTY SERVICE

All products returned to WinSystems must be assigned a Return Material Authorization (RMA) number. To obtain this number, please call or FAX WinSystems' factory in Arlington, Texas and provide the following information:

1. Description and quantity of the product(s) to be returned including its serial number.
2. Reason for the return.
3. Invoice number and date of purchase (if available), and original purchase order number.
4. Name, address, telephone and FAX number of the person making the request.
5. Do not debit WinSystems for the repair. WinSystems does not authorize debits.

After the RMA number is issued, please return the products promptly. Make sure the RMA number is visible on the outside of the shipping package.

The customer must send the product freight prepaid and insured. The product must be enclosed in an anti-static bag to protect it from damage caused by static electricity. Each bag must be completely sealed. Packing material must separate each unit returned and placed as a cushion between the unit(s) and the sides and top of the shipping container. WinSystems is not responsible for any damage to the product due to inadequate packaging or static electricity.

Artisan Technology Group - Quality Instrumentation ... Guaranteed | (888) 88-SOURCE | www.artisantg.com

Artisan Technology Group

Artisan Technology Group is your source for quality new and certified-used/pre-owned equipment

- FAST SHIPPING AND DELIVERY
- TENS OF THOUSANDS OF IN-STOCK ITEMS
- EQUIPMENT DEMOS
- HUNDREDS OF MANUFACTURERS SUPPORTED
- LEASING/MONTHLY RENTALS
- ITAR CERTIFIED SECURE ASSET SOLUTIONS

SERVICE CENTER REPAIRS
Experienced engineers and technicians on staff at our full-service, in-house repair center

InstraView℠ REMOTE INSPECTION
Remotely inspect equipment before purchasing with our interactive website at ***www.instraview.com*** ↗

WE BUY USED EQUIPMENT
Sell your excess, underutilized, and idle used equipment
We also offer credit for buy-backs and trade-ins
www.artisantg.com/WeBuyEquipment ↗

LOOKING FOR MORE INFORMATION?
Visit us on the web at ***www.artisantg.com*** ↗ for more information on price quotations, drivers, technical specifications, manuals, and documentation

Contact us: (888) 88-SOURCE | sales@artisantg.com | www.artisantg.com