Artisan Technology Group

Artisan Technology Group is your source for quality new and certified-used/pre-owned equipment

- FAST SHIPPING AND DELIVERY
- TENS OF THOUSANDS OF IN-STOCK ITEMS
- EQUIPMENT DEMOS
- HUNDREDS OF MANUFACTURERS SUPPORTED
- LEASING/MONTHLY RENTALS
- ITAR CERTIFIED SECURE ASSET SOLUTIONS

SERVICE CENTER REPAIRS
Experienced engineers and technicians on staff at our full-service, in-house repair center

InstraView℠ REMOTE INSPECTION
Remotely inspect equipment before purchasing with our interactive website at ***www.instraview.com*** ↗

WE BUY USED EQUIPMENT
Sell your excess, underutilized, and idle used equipment
We also offer credit for buy-backs and trade-ins
www.artisantg.com/WeBuyEquipment ↗

LOOKING FOR MORE INFORMATION?
Visit us on the web at ***www.artisantg.com*** ↗ for more information on price quotations, drivers, technical specifications, manuals, and documentation

Contact us: (888) 88-SOURCE | sales@artisantg.com | www.artisantg.com

XVME-951

PC/XT VMEbus Adapter Module Manual

74951-001C

© 1994 XYCOM, INC.

Printed in the United States of America
Part Number 74951-001C

XYCOM
750 North Maple Road
Saline, Michigan 48176
(313) 429-4971

Artisan Technology Group - Quality Instrumentation ... Guaranteed | (888) 88-SOURCE | www.artisantg.com

XYCOM REVISION RECORD

Revision	*Description*	*Date*
A	Manual Released	10/88
B	Manual Updated	2/92
C	Manual Updated	6/94

Trademark Information

Brand or product names are registered trademarks of their respective owners.

Copyright Information

This document is copyrighted by Xycom Incorporated (Xycom) and shall not be reproduced or copied without expressed written authorization from Xycom.

The information contained within this document is subject to change without notice. Xycom does not guarantee the accuracy of the information and makes no commitment toward keeping it up to date.

Address comments concerning this manual to:

xycom

Technical Publications Department
750 North Maple Road
Saline, Michigan 48176

Part Number: ***74951-001C***

Artisan Technology Group - Quality Instrumentation ... Guaranteed | (888) 88-SOURCE | www.artisantg.com

Artisan Technology Group - Quality Instrumentation ... Guaranteed | (888) 88-SOURCE | www.artisantg.com

TABLE OF CONTENTS

CHAPTER	TITLE	PAGE
1	**INTRODUCTION**	
1.1	Product Overview	1-1
1.2	Manual Structure	1-1
1.3	Module Operational Description	1-1
1.4	Specifications	1-3
2	**INSTALLATION**	
2.1	Introduction	2-1
2.2	Installing a Short Card	2-1
2.3	Installing Disk Drive Cables	2-4
2.4	Installing The Module	2-5
2.4.1	Installing an XVME-951/1	2-5
2.4.2	Installing an XVME-951/2	2-7

APPENDICES

A	Block Diagram, Assembly Drawing, and Schematics

LIST OF FIGURES

FIGURE	TITLE	PAGE
1-1	Module Operational Block Diagram	1-2
2-1	XVME-951 with PC/XT Short Card	2-1
2-2	Installing the XVME-951/1/2 Disk Drive Cables	2-4
2-3	Installing the XVME-951/2 onto a CPU	2-8
2-4	Installing the XVME-951/2 onto an XVME-956/12 or XVME-957/12	2-10

LIST OF TABLES

TABLE	TITLE	PAGE
1-1	Adapter Module Specifications	1-3
2-1	Jumper Signals	2-3

Artisan Technology Group - Quality Instrumentation ... Guaranteed | (888) 88-SOURCE | www.artisantg.com

Artisan Technology Group - Quality Instrumentation ... Guaranteed | (888) 88-SOURCE | www.artisantg.com

1.1 PRODUCT OVERVIEW

The XVME-951 PC/XT VMEbus Adapter Module is a double-high, double-wide VMEbus compatible board that occupies two VMEbus card slots. The XVME-951 enables you to integrate your unique PC/XT short cards, such as modem and communication modules, into your VME bus system. The XVME-951/1 is designed to operate with Xycom's XVME-684, XVME-686, or XVME-687 VMEbus PC/AT processor modules. The XVME-951/2 is designed to operate with the XVME-674, XVME-677, XVME-678, and XVME-688 VMEbus PC/AT processor module.

1.2 MANUAL STRUCTURE

This manual introduces you to the general specifications and functional capabilities of the XVME-951 adapter module and provides instructions for its installation.

Briefly reviewing the outline of the manual structure should help direct you to the specific sections of information relevant to your needs. The chapters are presented as follows:

Chapter 1: **Introduction** - Provides a general description of the adapter module including functional capabilities, buffer outputs, VMEbus compliance information, and a detailed block diagram.

Chapter 2: **Installation** - Details installation information about attaching the PC/XT short cards to the module, installing the module in the chassis, and positioning the board interconnect cable at the rear of the chassis.

Appendix A: **Block Diagram, Assembly Drawing, and Schematics**

1.3 MODULE OPERATIONAL DESCRIPTION

Figure 1-1 on the following page shows an operational block diagram of the XVME-951 adapter module.

Artisan Technology Group - Quality Instrumentation ... Guaranteed | (888) 88-SOURCE | www.artisantg.com

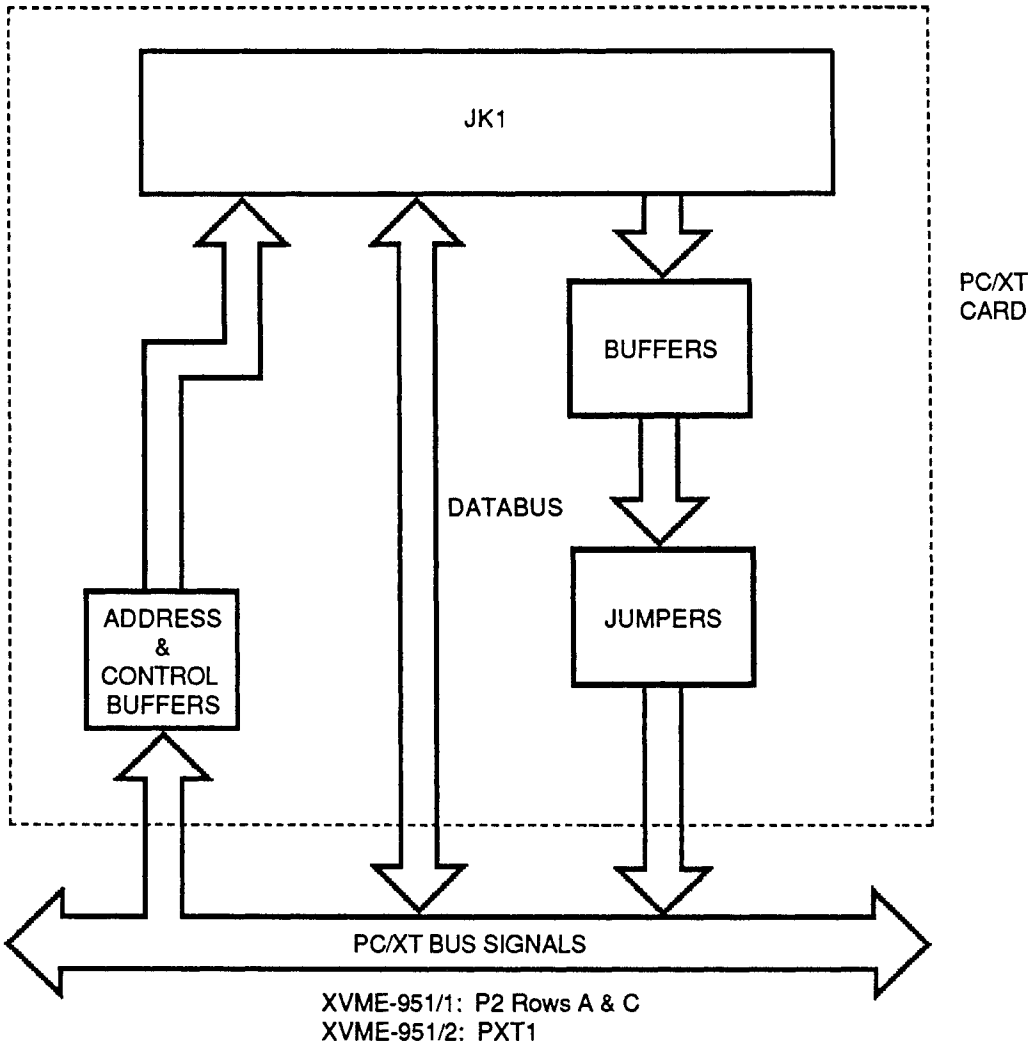

Figure 1-1. Module Operational Block Diagram

Artisan Technology Group - Quality Instrumentation ... Guaranteed | (888) 88-SOURCE | www.artisantg.com

1.4 SPECIFICATIONS

Table 1-1 lists the various operational specifications for the XVME-951 adapter module.

Table 1-1. Adapter Module Specifications

Characteristic	Specification	
Power Requirements (without PC/XT card installed)	+5V: 250 mA, typical 450 mA, maximum	
Buffer Outputs	V_{OL}: .5V max. I_{OL}: 64 mA V_{OH}: 2.0V min. I_{OH}: -15 mA	
Allowable PC/XT Card Dimensions	Height: 4.0" max., 3.5" min. Width: 5.70" max.	
PC/XT Signals	Buffered: SA0-SA19 SMEMR*, SMEMW* IOW*, IOR* DACK1*, 2* & 3* T/C, BALE REFRESH* CLK OSC RESETDRV AEN IRQ3-7, 9 DRQ1-3	Unbuffered: SD0-7 I/O CH CK* I/O CH RDY*
VMEbus Compliance	Double-high, double-wide VMEbus form factor	

Artisan Technology Group - Quality Instrumentation ... Guaranteed | (888) 88-SOURCE | www.artisantg.com

Artisan Technology Group - Quality Instrumentation ... Guaranteed | (888) 88-SOURCE | www.artisantg.com

2.1 INTRODUCTION

This chapter explains how to install the XVME-951 adapter module in three steps: attaching the PC/XT card to the XVME-951 card, connecting the disk drive cables, and installing the entire module into the VMEbus system. The first and second steps are the same for both versions of the XVME-951, but the third step depends on which version of the XVME-951 is being used.

2.2 INSTALLING A SHORT CARD

Before you attach the PC/XT short card to the XVME-951 adaptor, refer to Figure 2-1 below.

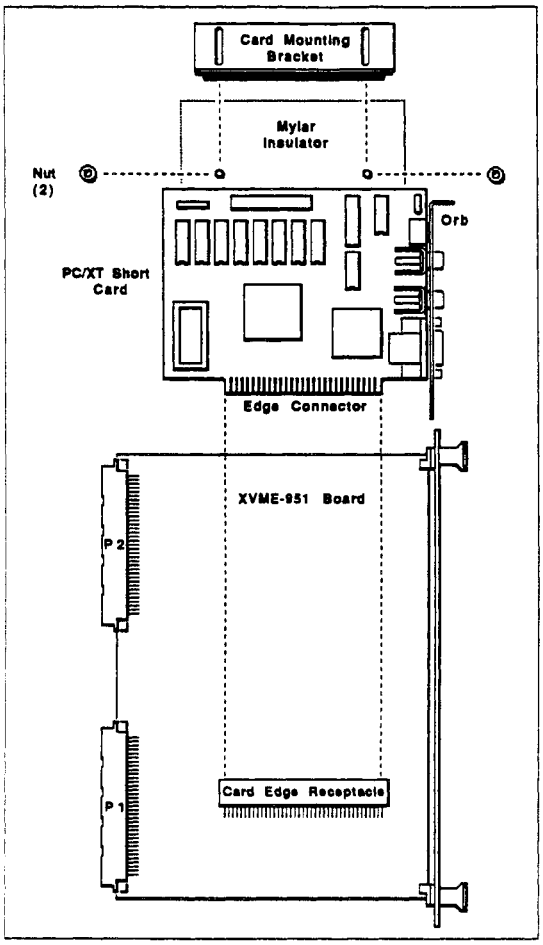

Figure 2-1. XVME-951 with PC/XT Short Card

Artisan Technology Group - Quality Instrumentation ... Guaranteed | (888) 88-SOURCE | www.artisantg.com

To attach a PC/XT short card to the XVME-951 module board, follow the instructions below:

1. The adjustable card mounting bracket on the XVME-951 (located near the P2 connector) needs to be removed from the module board before the PC/XT card can be attached. To detach the bracket, simply remove both screws.

2. Hold the PC/XT card so that the side with the components on it faces up and the ORB is at the front panel side of the module. The edge connector of the PC/XT card should now face the card edge receptacle that is on the XVME-951. Slide the edge connector into the card edge receptacle until fully engaged (only minimal pressure should be applied).

3. Center the protective mylar on the card mounting holes near the top edge of the PC/XT card. The mylar should extend under the PC/XT card to prevent it from touching the XVME-951.

4. Snap the plastic edge of the card mounting bracket onto the top edge of the PC/XT card, keeping the protective mylar centered beneath it.

> **NOTE**
> Never operate the XVME-951 without the protective mylar installed under the card mounting bracket and PC/XT card. Operating the XVME-951 without the mylar may damage the XVME-951 and/or PC/XT card.

5. If necessary, slide the bracket and/or mylar in the needed direction to properly align the slots in the bracket, the holes in the mylar, and the mounting holes in the XVME-951.

6. When the holes are properly aligned, tighten the two screws, lock washers, and nuts firmly, so that the nuts are on the same side of the board as the card.

7. Slide down the adjustable ORB bracket on the front panel (located near the top of the XVME-951) until it touches the PC/XT card ORB. Then tighten the two together with the nut and screw provided.

Artisan Technology Group - Quality Instrumentation ... Guaranteed | (888) 88-SOURCE | www.artisantg.com

8. Install the jumpers on the XVME-951 required by the PC/XT card installed. The IRQ signals and DRQ signals are buffered from the PC/XT card and, through the jumpers, are driven to the CPU module. These jumpers (shipped with the XVME-951) must be installed only if the corresponding signal is needed by the PC/XT module and only if the corresponding signal does not conflict with the CPU module. The jumpers are mapped to the signals as follows:

Table 2-1. Jumper Signals

Jumper	**Signal**
J1	Factory Test
J2	IRQ5
J3	IRQ4
J4	IRQ3
J5	IRQ7
J6	IRQ9
J7	DRQ1
J8	DRQ2
J9	IRQ6
J10	DRQ3

All jumpers are out when shipped from the factory. Only install the ones needed by a particular PC/XT module installed on the XVME-951 module.

NOTE
J1 **must** be installed for proper operation.

Artisan Technology Group - Quality Instrumentation ... Guaranteed | (888) 88-SOURCE | www.artisantg.com

2.3 INSTALLING DISK DRIVE CABLES

Both versions of the XVME-951 have holes in the PCB to facilitate routing cables for disk drive modules such as the XVME-955. When using these drive modules, the XVME-951 resides between the CPU module and the disk drive module. The cables, which connect the CPU module to the disk drive module, route through these holes as illustrated in Figure 2-2.

If you are not using a disk drive module, go to the next section. Otherwise, follow the steps outlined below:

1. The cables shipped with the disk drive unit are not long enough to accommodate passage through the XVME-951. The cables need to be 13 inches long. These longer cables need to be made or may be ordered from Xycom.

2. Connect both cables to the CPU module in an orientation such that the cables route towards the P1 and P2 connector of the CPU module.

3. Route the cables through the holes in the XVME-951's PCB. After passing through the holes, the cables will route on the right side of the XVME-951 and connect to the disk drive module.

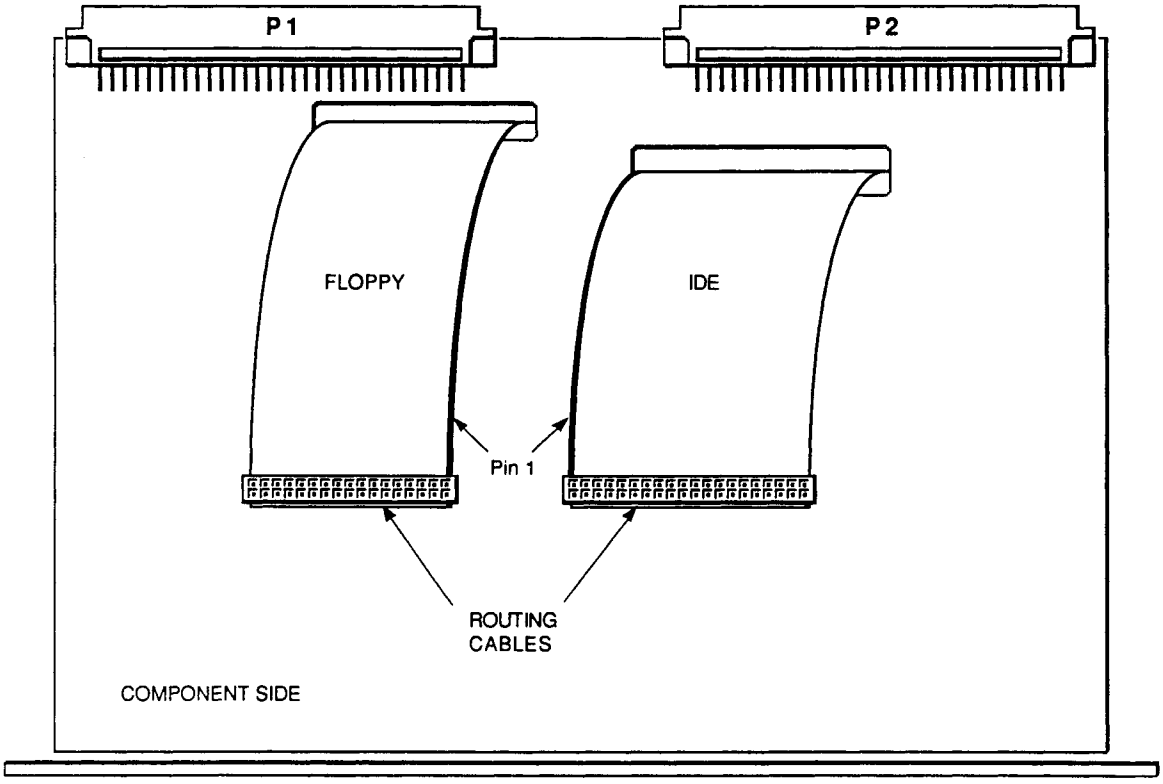

Figure 2-2. Installing the XVME-951/1/2 Disk Drive Cables

Artisan Technology Group - Quality Instrumentation ... Guaranteed | (888) 88-SOURCE | www.artisantg.com

2.4 INSTALLING THE MODULE

The XVME-951 comes in two versions: /1 and /2. The XVME-951/1 is used to interface with CPU modules which connect the PCbus to the VME P2 connector (such as Xycom's XVME-684, 686, and 687). The XVME-951/2 is used to interface with CPU modules which connect the PCbus to the interboard connector PXT1 (such as Xycom's XVME-674, 677, 678, and 688). Refer to Section 2.4.1 for the XVME-951/1, or 2.4.2 for XVME-951/2.

2.4.1 Installing an XVME-951/1

To install an XVME-951/1 module:

1. Install the CPU module and insure the two cardcage slots to the right of the CPU module are clear and accessible. The XVME-951/1 module occupies two slots and needs to be placed to the right of the CPU module.

2. Center the XVME-951/1 module on the plastic guides in the slots.

3. Push the module slowly to the rear of the chassis until the P1 and P2 connectors engage.

4. Apply straightforward pressure to the handles on the front panel until the connectors engage and are properly seated.

5. Install the backplane connector.

   The backplane connector used to connect the CPU module's P2 connector(s) to the XVME-951/1 module's P2 connector needs to be installed. The installation depends on whether the CPU module is comprised of two boards (XVME-684 and 687) or one board (XVME-686).

   Refer to Section 2.4.1.1 for instructions on installing a backplane connector for two board CPU modules and to Section 2.4.1.2 for instructions on installing a backplane connector for the one board CPU module.

Artisan Technology Group - Quality Instrumentation ... Guaranteed | (888) 88-SOURCE | www.artisantg.com

2.4.1.1 Two Board CPU Modules (XVME-684 and XVME-687)

Two board CPU modules utilize a three position backplane (shipped with the CPU module) to connect the boards' P2 connectors.

To install into the backplane:

1. Remove the two position backplane if it is already installed. On the back side of the VMEbus P2 backplane, locate the three P2 connectors used by the CPU module and the XVME-951/1 module.

2. Install the three position backplane (shipped with the XVME-951/1) into the three P2 connectors of the P2 backplane. Make sure pin 1, clearly marked on the three position backplane, is oriented towards the top.

2.4.1.2 One Board CPU Modules (XVME-686)

The CPU module and the XVME-951/1 module will occupy three slots, but only connect to two P2 connectors. (The right-most slot will be occupied by the XVME-951/1 but have no P2 connection.)

To install into the backplane:

1. Locate the P2 connectors which correspond to the three slots occupied by the CPU module and the XVME-951 on the back side of the VMEbus P2 backplane.

2. Install the three position backplane (shipped with the XVME-951/1) into the three P2 connectors of the P2 backplane. Make sure pin 1, clearly marked on the three position backplane, is oriented towards the top.

Artisan Technology Group - Quality Instrumentation ... Guaranteed | (888) 88-SOURCE | www.artisantg.com

2.4.2 Installing an XVME-951/2

This section details the installation of an XVME-951/2 module to a CPU module or an XVME-956/12 or XVME-957/12 module.

Before you start the installation:

1. The XVME-951/2 module occupies two slots and needs to be placed next to the CPU module. Insure that the following cardcage slot(s) are clear and accessible:

   - slot(s) occupied by the CPU module
   - slots to the right of the CPU module (required by the XVME-951/2)

2. Locate the bag containing the screws and standoffs which shipped with the XVME-951/2.

2.4.2.1 Installing an XVME-951/2 Module onto a CPU Module

To install an XVME-951/2 module onto a CPU module:

1. Remove and discard the connector P2 screw and nut closest to the bottom corner of the CPU module. Refer to Figure 2-3.

2. Attach the long female/female standoff to the solder side of the XVME-951/2 module, as illustrated in Figure 2-3, using a short screw.

3. Attach the short female/female standoff to the solder side of the XVME-951/2 module, as illustrated in Figure 2-3, using a short screw.

Artisan Technology Group - Quality Instrumentation ... Guaranteed | (888) 88-SOURCE | www.artisantg.com

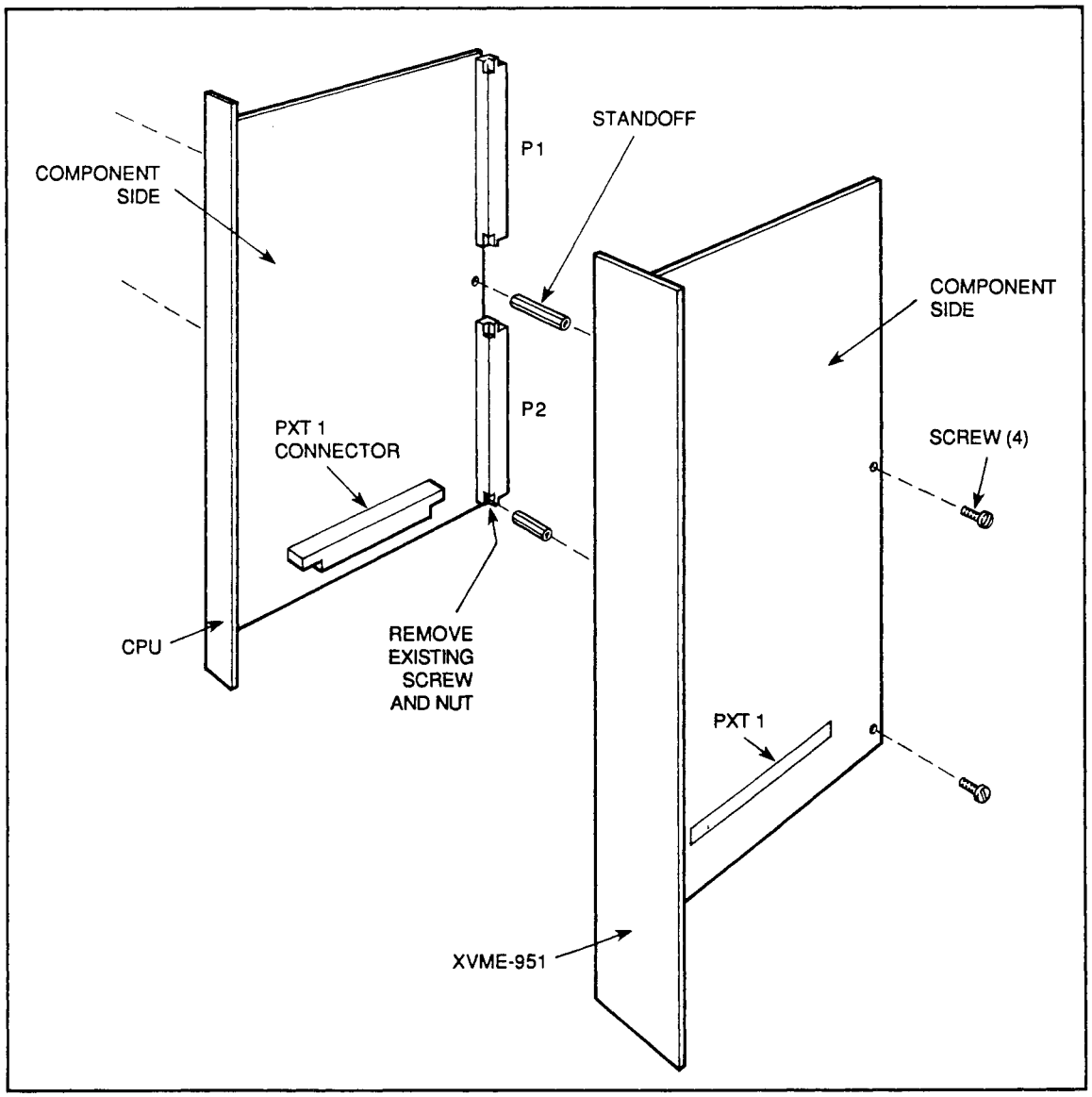

Figure 2-3. Installing the XVME-951/2 onto a CPU

4. Align the pins of the XVME-951/2 module's PXT1 connector with the CPU module's PXT1 connector socket. Gently press the two modules together until the standoffs (mounted on the 951 module) touch the component side of the CPU module. Insure that the two holes on the CPU module align with the standoffs.

5. Insert two long screws through the solder side of the CPU module into the standoffs.

Artisan Technology Group - Quality Instrumentation ... Guaranteed | (888) 88-SOURCE | www.artisantg.com

6. Center the boards of the CPU and XVME-951/2 modules on the plastic guides of the VME chassis.

7. Push the modules slowly to the rear of the chassis until the P1 and P2 connectors of the CPU module engage.

8. Apply straightforward pressure to the handles of the front panel of the CPU module until its connectors engage and are properly seated. Do not apply pressure to the handles on the front panel of the XVME-951/2 because there are no P1 and P2 connectors on the XVME-951/2.

2.4.2.3 **Installing an XVME-951/2 Module onto an XVME-956/12 or 956/12 Module**

To install an XVME-951/2 module onto an XVME-956/12 or 957/12 module:

1. Remove the two screws from the component side of the XVME-956/12 or the 957/12 module. Refer to Figure 2-4.

2. Screw the supplied male/female standoffs into the XVME-956/12 or 957/12, where the screws were removed in Step 1. Refer to Figure 2-4.

3. Align the pins of the XVME-951/2 module's PAT1 connector with the XVME-956/12 or XVME-957/12 module's PAT1 connector socket. Gently press the modules together until the standoffs (mounted on the 956 or 957 module) touch the solder side of the 951 module. Insure that the two holes on the 951 module align with the standoffs.

4. Insert the two screws from Step 1 through the component side of the XVME-951/2 module into the standoffs.

5. Align the pins of the XVME-956/12 or 957/12 module's PAT1 connector with the CPU module's PXT1 and PAT1 connector socket. Then secure the 956/12 or 957/12 and 951/2 assembly to the CPU module using long and short female/female standoffs and long screws supplied with the 956/12 or 957/12 module.

6. Center the boards of the CPU, XVME-956/12 or 957/12, and XVME-951/2 modules on the plastic guides of the VME chassis.

7. Push the modules slowly to the rear of the chassis until the P1 and P2 connectors of the CPU module engage.

8. Apply straightforward pressure to the handles of the front panel of the CPU module until its connectors engage and are properly seated. Do not apply pressure to the handles on the front panels of the XVME-956/12 or XVME-957/12 and XVME-951/2, because there are no P1 and P2 connectors on these modules.

Artisan Technology Group - Quality Instrumentation ... Guaranteed | (888) 88-SOURCE | www.artisantg.com

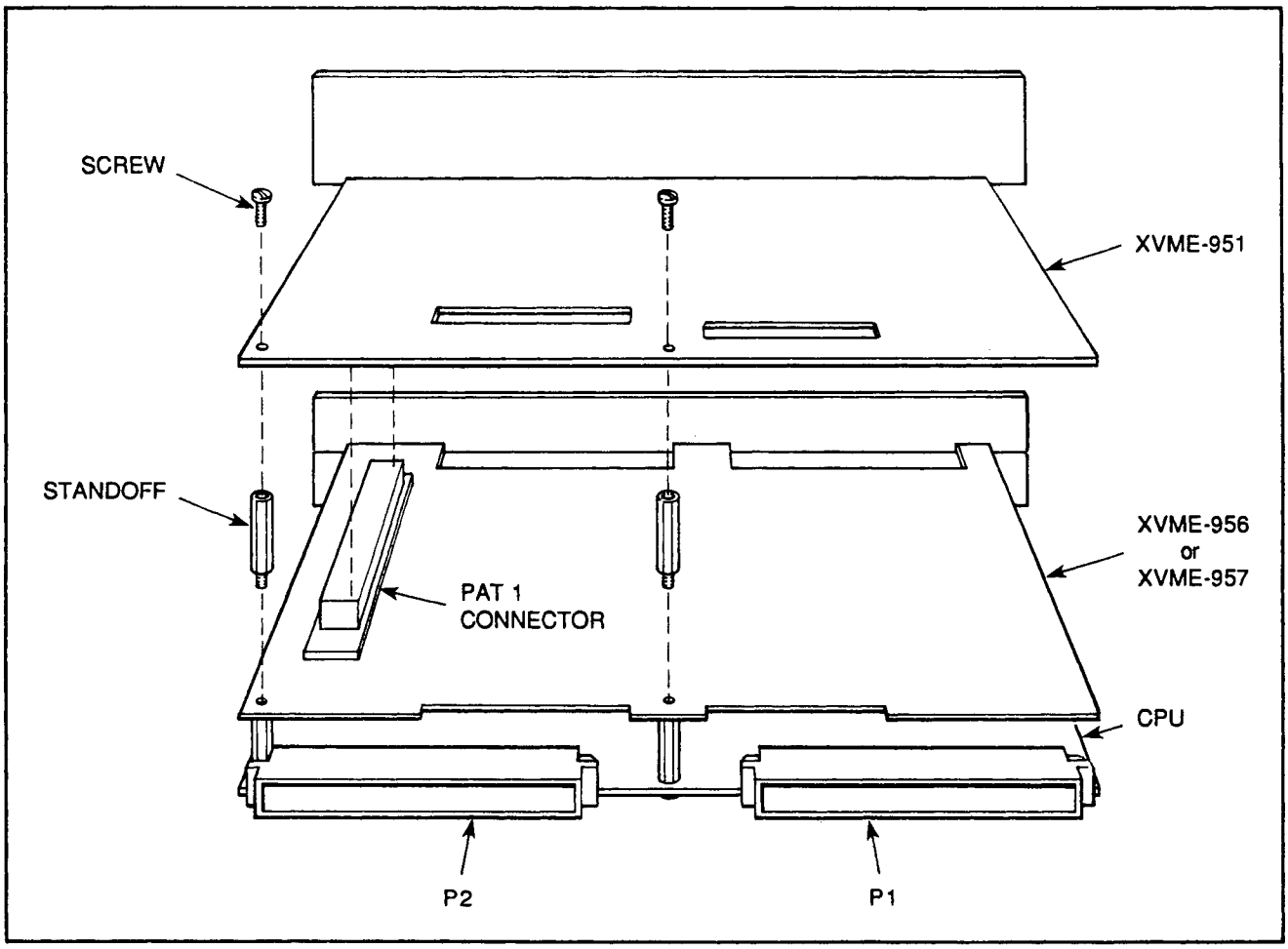

Figure 2-4. Installing the XVME-951/2 onto an XVME-956/12 or XMVE-957/12

Artisan Technology Group - Quality Instrumentation ... Guaranteed | (888) 88-SOURCE | www.artisantg.com

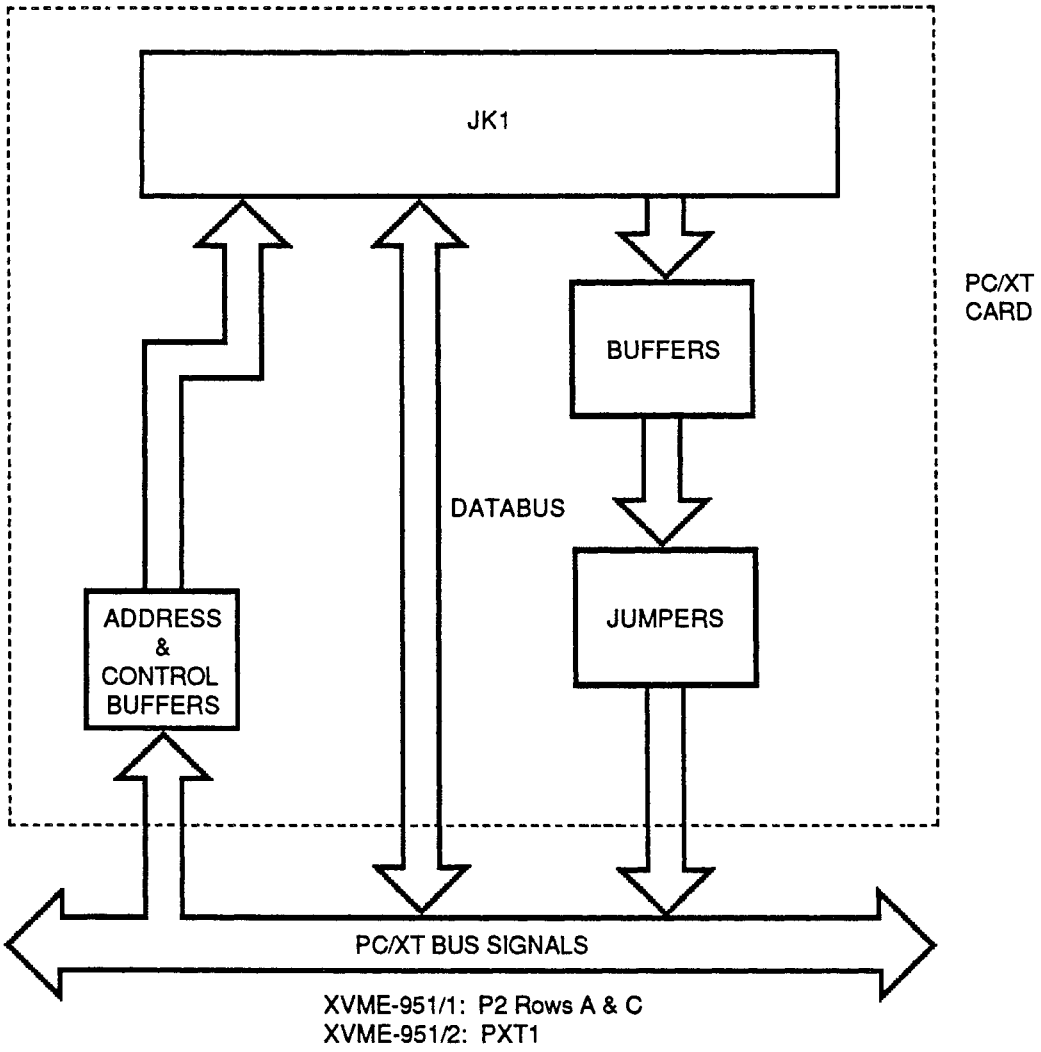

Figure A-1. Block Diagram

Artisan Technology Group - Quality Instrumentation ... Guaranteed | (888) 88-SOURCE | www.artisantg.com

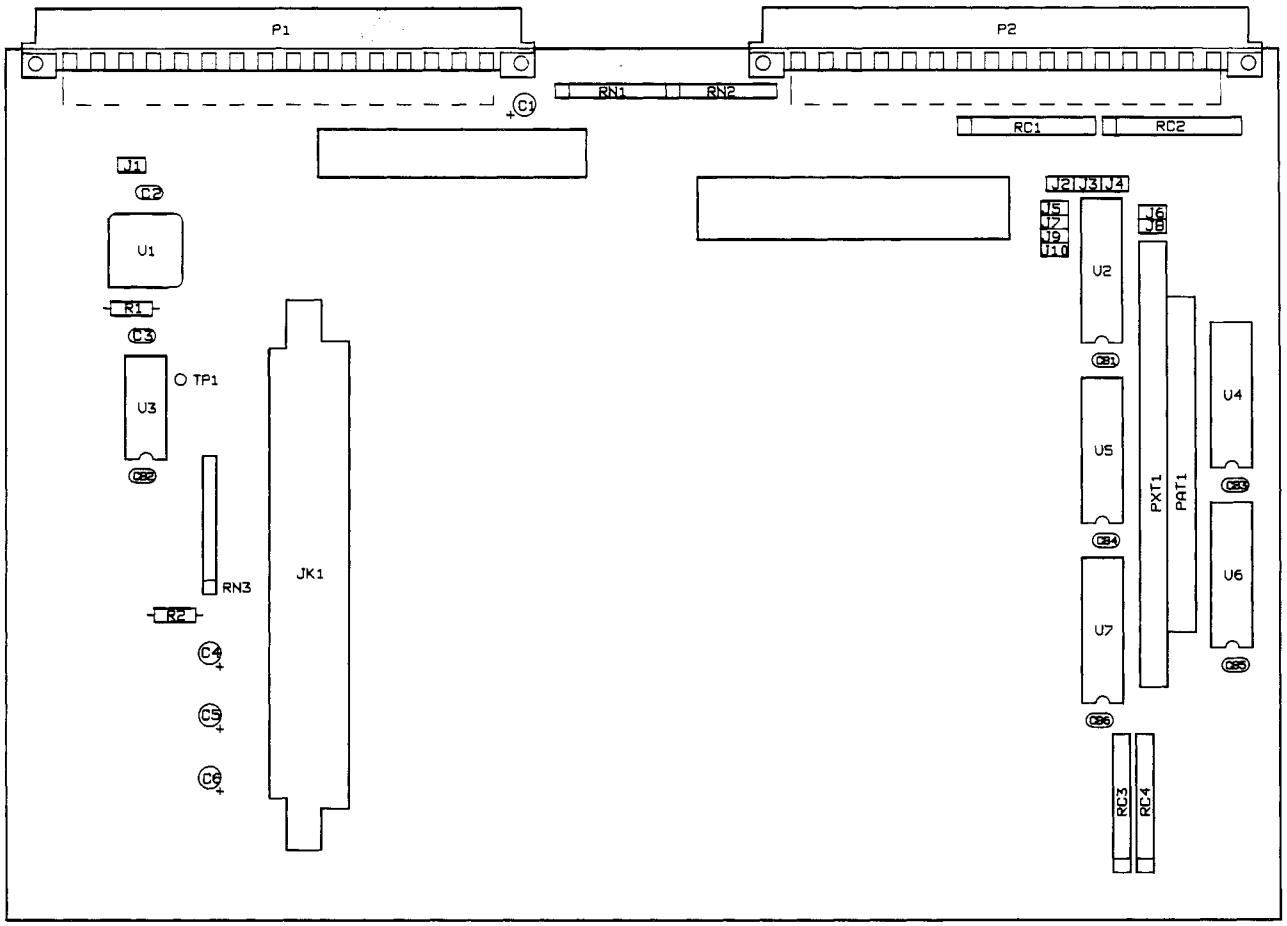

Figure A-2. Assembly Drawing

Artisan Technology Group - Quality Instrumentation ... Guaranteed | (888) 88-SOURCE | www.artisantg.com

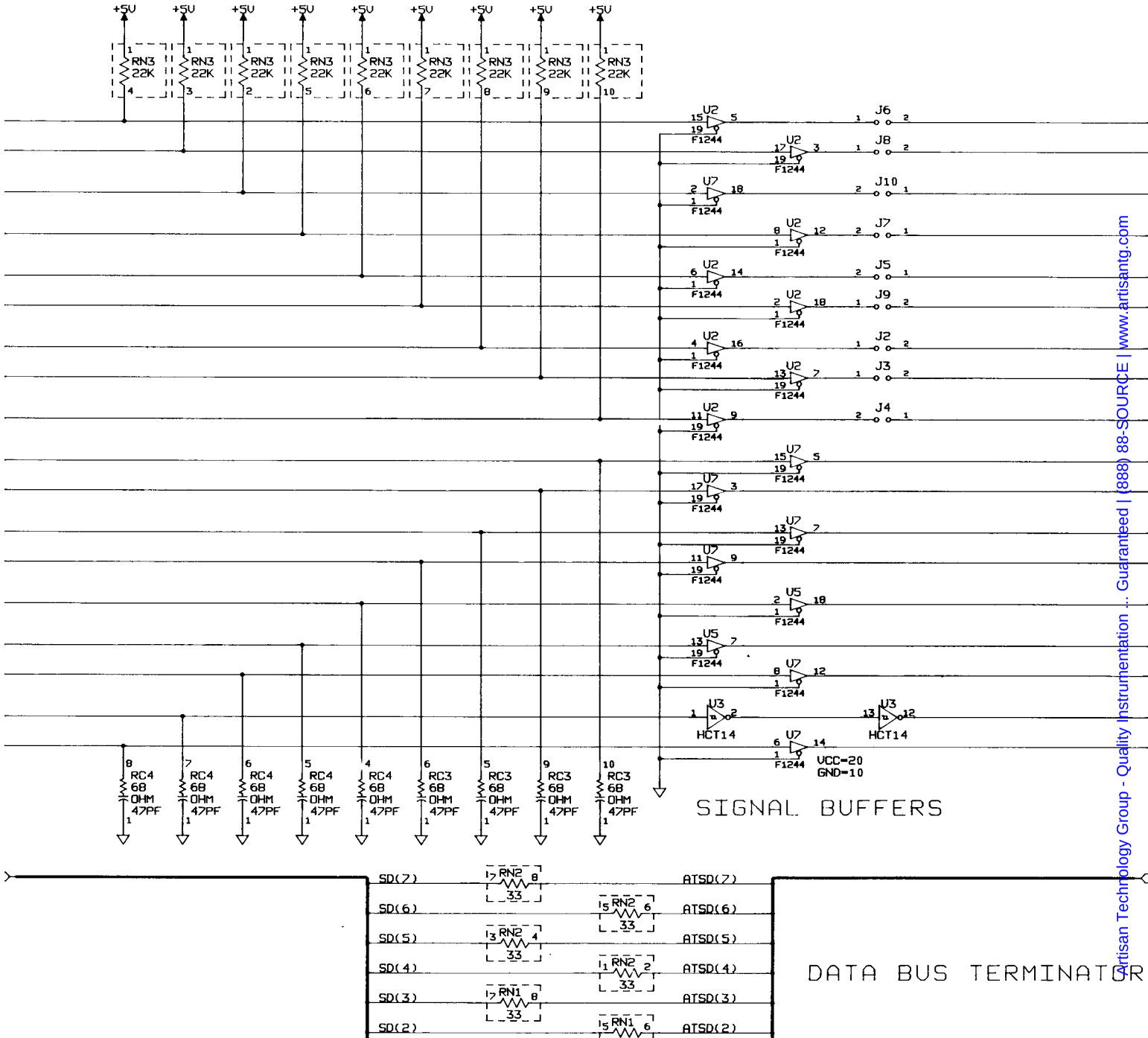

Artisan Technology Group - Quality Instrumentation ... Guaranteed | (888) 88-SOURCE | www.artisantg.com

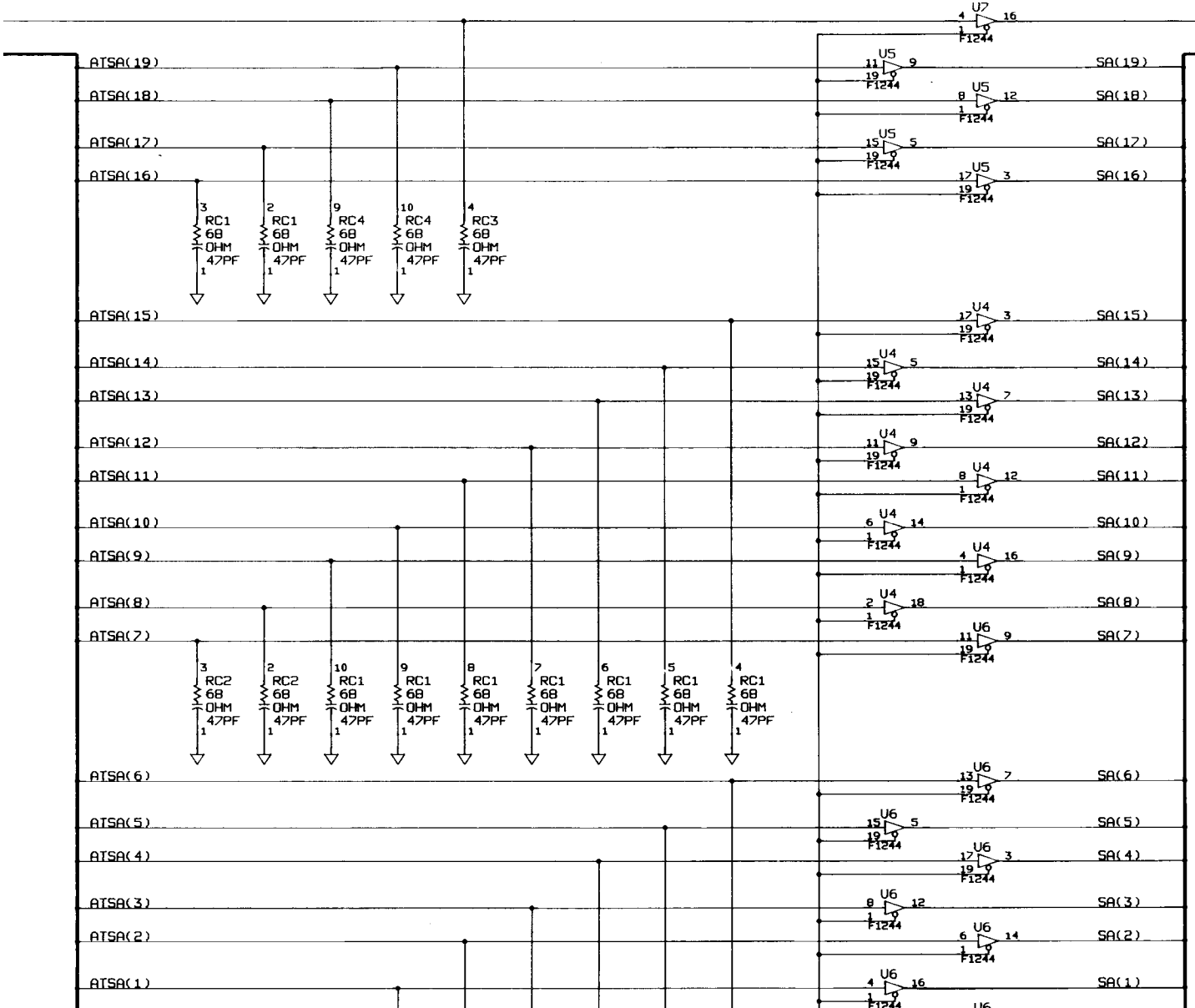

Artisan Technology Group - Quality Instrumentation ... Guaranteed | (888) 88-SOURCE | www.artisantg.com

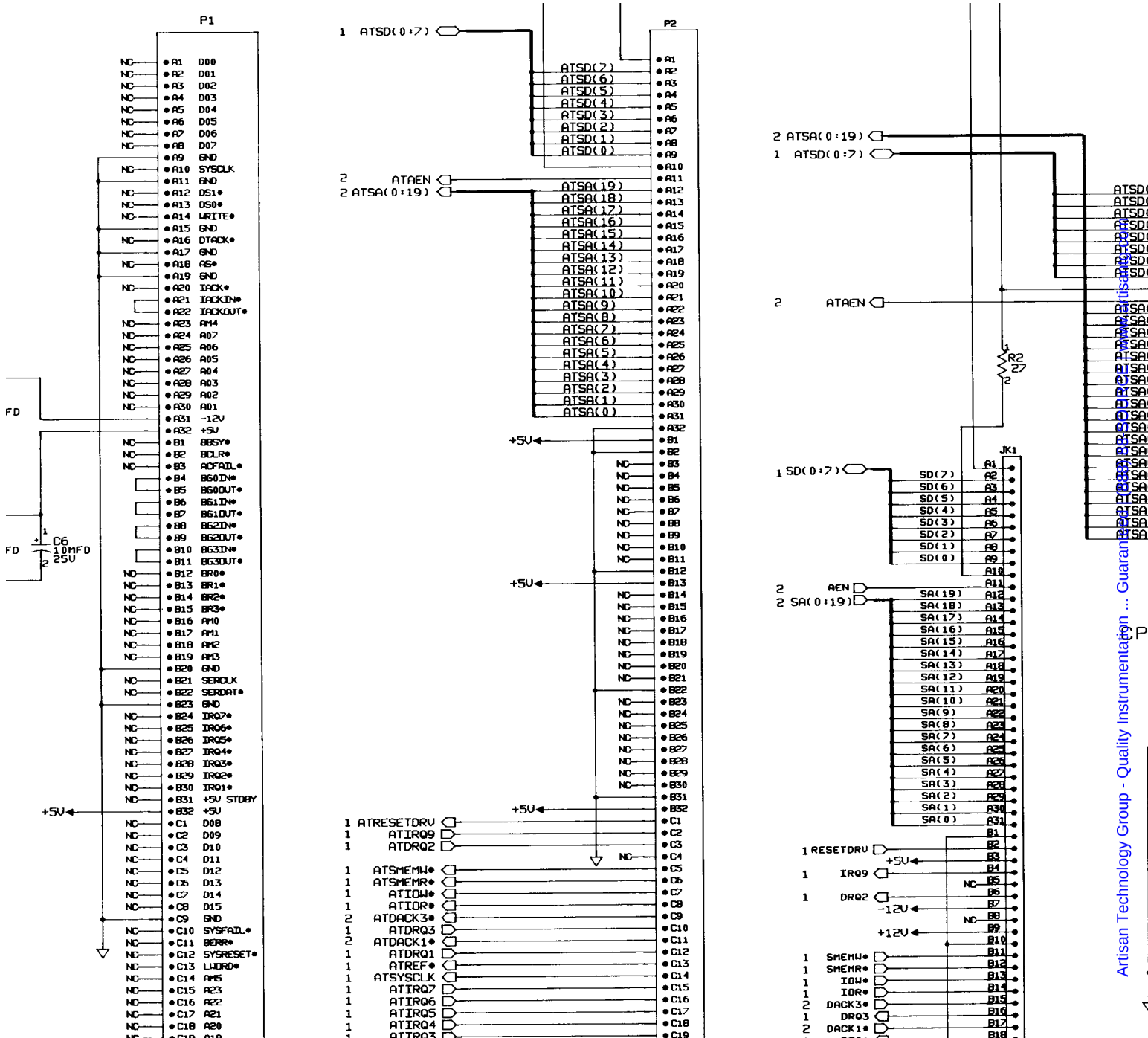

Artisan Technology Group - Quality Instrumentation ... Guaranteed

XYCOM MANUAL BUG REPORT

We have provided this form to track errors that may exist in our manuals and to incorporate improvements. Please describe in the space below any errors found in this manual or any helpful suggestions to improve its usefulness. To return this form, fold it in half so the postage-paid* side shows, and tape it closed. We appreciate your input and will incorporate the changes in future revisions.

Current Information

Page number(s): _____ Figure number(s): _____

Information as currently printed: _____

Proposed Change(s)

Information as it should be printed: _____

Any additional information: _____

Address (optional)

Name _____

Title _____

Company _____

Address _____

City _____ State _____ ZIP _____

Telephone _____

Xycom Use Only			Log Number
Date Received:			
Date Resolved:			
Manner Resolved:	PCN#:	Revision:	Void:

XVME-951 PC/XT VMEbus Adapter Module, 74951-001C

**If mailing this card from outside the United States, please use an envelope with appropriate postage.*

Artisan Technology Group - Quality Instrumentation ... Guaranteed | (888) 88-SOURCE | www.artisantg.com

xycom®

Xycom Manual Bug Report

Thank you for returning this form. We appreciate your feedback.

NO POSTAGE NECESSARY IF MAILED IN THE UNITED STATES

BUSINESS REPLY MAIL

First Class Permit No. 42 Saline, Michigan

POSTAGE WILL BE PAID BY ADDRESSEE

XYCOM, INC.
750 N. MAPLE ROAD
SALINE, MICHIGAN 48176

Artisan Technology Group - Quality Instrumentation ... Guaranteed | (888) 88-SOURCE | www.artisantg.com

Artisan Technology Group

Artisan Technology Group is your source for quality new and certified-used/pre-owned equipment

- FAST SHIPPING AND DELIVERY
- TENS OF THOUSANDS OF IN-STOCK ITEMS
- EQUIPMENT DEMOS
- HUNDREDS OF MANUFACTURERS SUPPORTED
- LEASING/MONTHLY RENTALS
- ITAR CERTIFIED SECURE ASSET SOLUTIONS

SERVICE CENTER REPAIRS
Experienced engineers and technicians on staff at our full-service, in-house repair center

InstraView℠ REMOTE INSPECTION
Remotely inspect equipment before purchasing with our interactive website at ***www.instraview.com*** ↗

WE BUY USED EQUIPMENT
Sell your excess, underutilized, and idle used equipment
We also offer credit for buy-backs and trade-ins
www.artisantg.com/WeBuyEquipment ↗

LOOKING FOR MORE INFORMATION?
Visit us on the web at ***www.artisantg.com*** ↗ for more information on price quotations, drivers, technical specifications, manuals, and documentation

Contact us: (888) 88-SOURCE | sales@artisantg.com | www.artisantg.com